PLEASE READ

This manual is provided as a free service by Projector.com.

We are in no way responsible for the contents of the manual. We do not guarantee its accuracy and we do not make any claim of copyright. The copyright remains the property of their respective owners.

ABOUT PROJECTOR.COM

Projector.com (http://www.projector.com) is your review and buying guide resource for DLP and LCD video projectors.

Visit the site to read the latest projector news and reviews, read and comment on projector specifications, download user manuals and much more.

USER'S GUIDE

PROXIMA®

Desktop Projector™ 9100

Multimedia LCD Projector

(Not actual front cover)

Downloaded from Projector.com

WARRANTY

Proxima Corporation warrants that the Proxima® Desktop Projector™ product manufactured by Proxima is free from defects in materials and workmanship under normal use during the Warranty Period. The Warranty Period commences on the day of purchase by the end-user. The Warranty Period is one year. The projector lamp is not covered by this Warranty.

Each Proxima product is manufactured from new parts, or new and some used parts. In some cases, the product may have been delivered to another end-user and then returned. In all cases, the product has undergone testing and quality inspection, and Proxima's full warranty terms apply.

The end-user's sales receipt or invoice showing the date of purchase of the product and the name of the Reseller is proof of date of purchase. The Warranty extends only to the original purchaser and is not transferable.

During the Warranty Period, Proxima will, at no additional charge, repair or replace defective parts or at the option of Proxima, replace the entire unit.

This limited Warranty does not extend to any Proxima product that has been damaged or been rendered defective (a) as a result of accident, misuse or other abuse; (b) by the use of parts not manufactured or sold by Proxima; (c) by modification of the product; or (d) as a result of servicing by non-authorized personnel.

LIMITATION OF WARRANTIES

The foregoing Warranty is expressly in lieu of any other expressed or implied, warranties, including, without limitation, warranties of merchantability or fitness for a particular purpose. To the extent not prohibited by law, all statutory warranties are hereby waived and excluded from this Warranty. Proxima expressly disclaims all warranties not stated in this Limited Warranty.

FCC STATEMENT

Warning: This is a Class A product. In a domestic environment this product may cause radio interference, in which case the user may be required to take adequate measures.

Warning: This equipment generates, uses and can radiate radio frequency energy and, if not installed and used in accordance with the instruction manual, may cause interference to radio communications. It has been tested and found to comply with limits for a Class “A” computing device pursuant to Subpart B of Part 15 of the FCC Rules, which are designed to provide reasonable protection against such interference when operated in a commercial environment. Operation of this equipment in a residential area is likely to cause interference in which case the user, at his own expense, will be required to take whatever measures may be necessary to correct the interference.

TRADEMARKS, PATENTS, AND COPYRIGHTS

Proxima and Cyclops are registered trademarks; MediaExpress is a trademark of Proxima Corporation. LightBoard, and Fit-To-View are trademarks of Proxima Corporation. Desktop Projector, Desktop Projection are trademarks of Proxima Corporation. Macintosh is a registered trademark of Apple Computer, Inc. Other trademarks are the property of their respective owners. This product is covered by the following U.S. patent number: 5,510,861. Foreign patents applied for.

© 1996 Proxima Corporation. All rights reserved. Specifications are subject to change without notice.

Downloaded from Projector.com

Introducing the DP9100

The Proxima® Desktop Projector™ family consists of portable, color data and video LCD projectors that make sharing data and presenting information as easy as connecting your computer to your monitor.

The Desktop Projector 9100 is a high-resolution multimedia LCD projector that offers a high-quality, extremely bright image. It is compatible with a wide range of computers and resolutions—from 640 x 480 personal computers to 1280 x 1024 workstations.

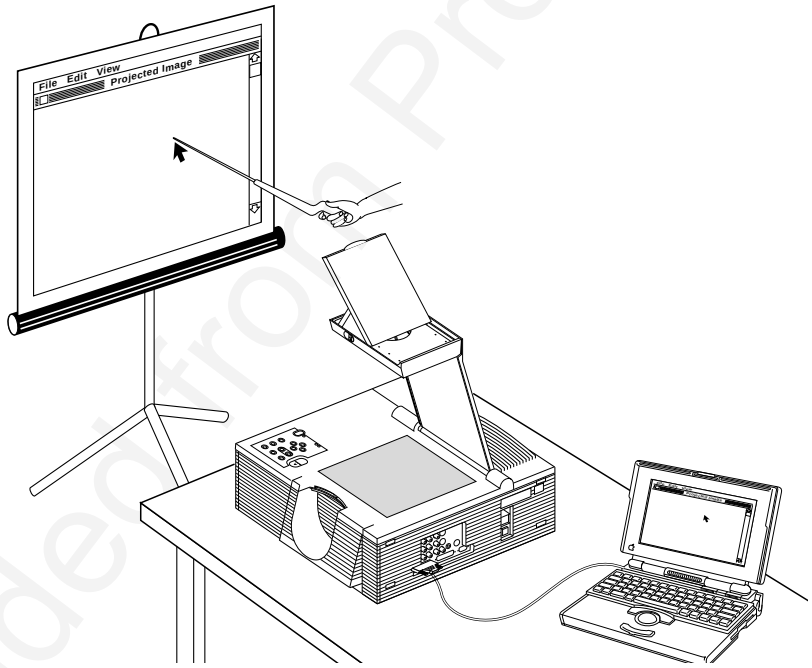

Figure i-1 The Proxima Desktop Projector 9100 in use

Downloaded from Projector.com

CYCLOPS INTERACTIVE POINTER SYSTEM

All Proxima Desktop Projector products come Cyclops®-ready. The Cyclops interactive pointer system functions like a cordless mouse, allowing you to control your computer and software by pointing at the projection screen.

INTRODUCING THE MEDIAEXPRESS SYSTEM

The MediaExpress™ Image Display System is a hybrid, next-generation product that brings the functionality of computers and projectors much closer together.

The MediaExpress system eliminates the need to connect a computer to the projector. Just save your presentation from whatever application you're using to a special kind of file (called a .PDF file), copy the file on a disk, then place the disk in the MediaExpress disk drive and start the show.

If you'd like to order the MediaExpress system, contact your local dealer or refer to Appendix B for ordering information.

Downloaded from Projector.com

WHAT'S IN THE BOX?

After you open the box and remove the projector and the shrink-wrapped accessory packs, make sure you have all of the items shown below.

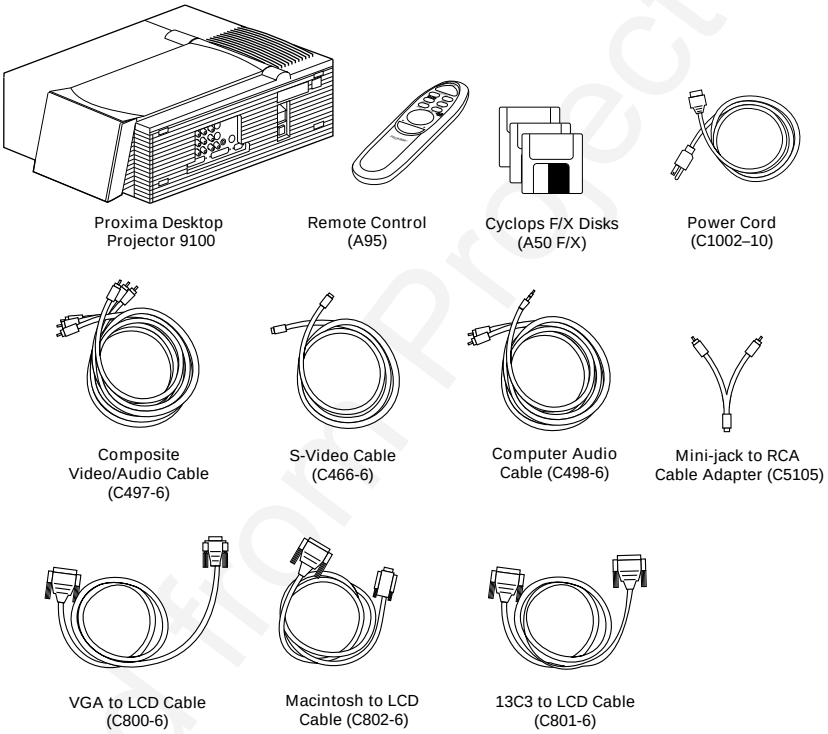

Also included but not shown:

- MAC to LCD Adapter (C804)
- SGI to LCD Cable and Adapter (C943-6 and C947-12)
- DEC 3C3 to LCD Cable and Adapter (C948-6 and C947-10)
- MAC (C470-6) and PC (C936-6) Serial Cables (included with remote)
- (2) AAA Alkaline Batteries
- User's Guide
- Product Registration Card
- European (C1001-10), U.K. (C1004-10), and Italian (C1003-10) power cords

Figure i-2, Items included with the Desktop Projector 9100

Downloaded from Projector.com

QUICK START

To connect the projector to your computer, read the section appropriate for your hardware (or read Chapter 1, which lists these steps in greater detail).

Take a moment to familiarize yourself with the parts of the projector:

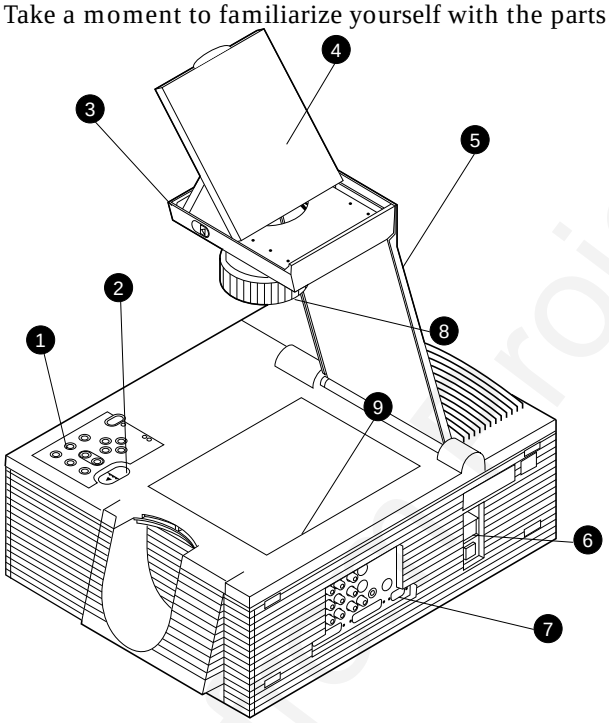

Figure i-3, The Desktop Projector 9100

NUMBER	ITEM
1	control panel
2	arm release lever
3	flip mirror release lever
4	flip mirror
5	projection arm
6	power switch
7	connector panel
8	projection lens
9	projection window

Downloaded from projector.com

Step 1: Setting up the projector

1. Place the projector on a solid, flat surface.
2. Position the projector so that the side with the handle is facing the projection screen.
3. Locate the arm release lever (see the next figure). Slide it gently in the direction of the arrow.

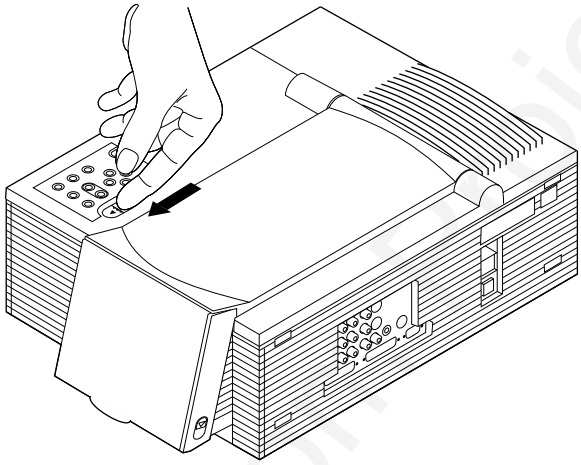

Figure i-4, Pressing the lever to release the arm

4. The arm pops up. Gently lift the arm. It raises automatically until it is fully extended. *Do not force the arm further.*

Downloaded from Projector.com

5 Locate the flip mirror release lever on the top of the arm (see Figure i-5). Push it in the direction of the arrow while pulling up on the lift tab. This releases the flip mirror.

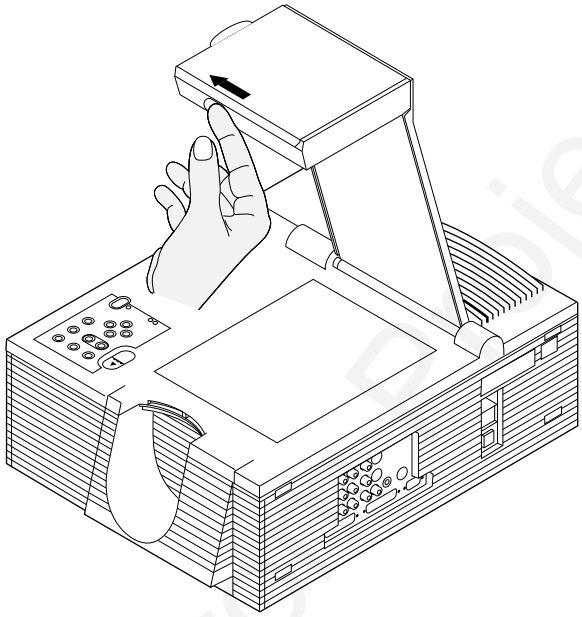

Figure i-5, Pressing the lever to release the flip mirror

Downloaded from Projector.com

6 Gently tilt the mirror to approximately 45 degrees. (You can adjust the angle later to raise or lower the projected image.)

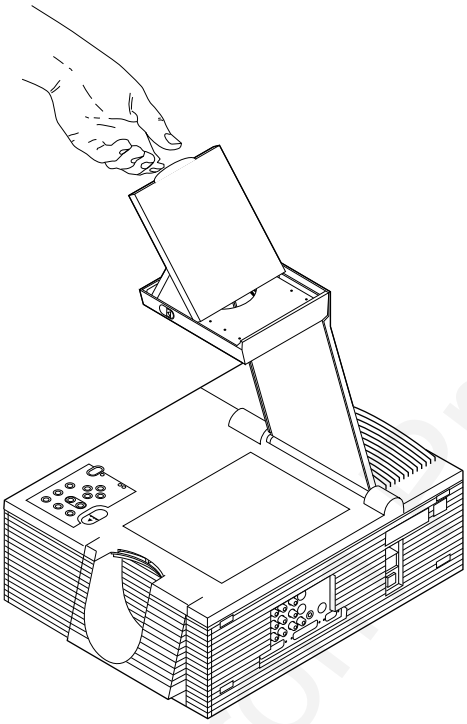

Figure i-6, Flipping the mirror to a 45-degree angle

CAUTION! *Never push on or force the mirror. Always use care when opening the mirror assembly. Avoid touching the surface of the mirror with your fingers.*

Downloaded from projector.com

Step 2: Connecting the computer

In general, use the Proxima cable appropriate for your system to connect your computer to the DP9100. Connect your computer's video out port to the COMPUTER IN port on the projector. If you want to connect an external monitor, use your existing monitor cable to connect the projector's COMPUTER OUT port to your monitor.

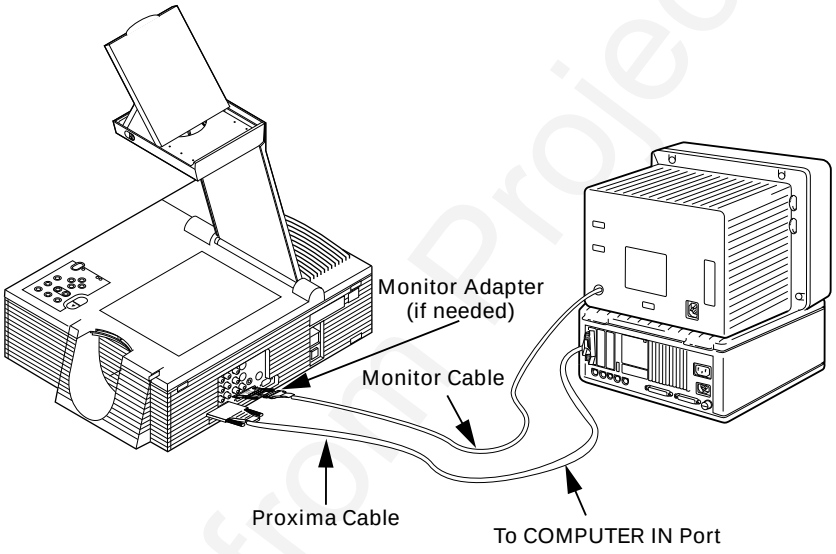

Figure i-7, Connecting the projector to your computer

In some cases a Proxima adapter is required to connect your computer and monitor to the projector. The adapters you'll need are included with your projector. See *Chapter 1, Setting Up Your Projector* for more detailed information on connecting your system.

Downloaded from Projector.com

Step 3: Connecting video and audio

Connect audio and video sources to the projector, using this table as a guide. If you need more information, see the appropriate section in Chapter 2.

TO SET THIS UP:	CONNECT THIS CABLE:	FROM HERE:	TO HERE:
Video from VCR/ laserdisc	Composite audio/video cable (C497-6).	VIDEO 1, 2 ports on projector.	RCA port on VCR marked "VIDEO OUT" or something similar.
Video from S-Video device	S-Video cable (C466-6).	S-Video 1, 2 ports on projector.	Video Out port on S-Video device.
Audio from VCR/laserdisc	Composite audio/video cable (C497-6).	AUDIO IN 1, 2 ports on projector (red = right, white = left).	Audio Out port on VCR (red= right, white = left).
Audio from computer	Computer audio cable (C498-6).	Left/right COMPUTER AUDIO IN ports on projector.	AUDIO OUT port of the Mac or the sound card of a PC.
External speakers	Mini-jack to RCA cable adapter (C5105) and mini-jack cable (included with speakers).	AUDIO OUT 1, 2 ports on projector.	Mini-jack cable included with speakers.
Stereo system	RCA stereo cable (comes with stereo).	AUDIO OUT 1, 2 ports on projector.	Left/right AUDIO IN ports on amplifier.
Microphone	Microphone cable supplied with microphone.	MIC port on projector.	Amplified microphone.

Step 4: Turning on the projector

Once you've connected your computer and any video or audio sources, turn on the power:

1. Plug the power cord into the projector's power receptacle. Plug the other end into a properly grounded wall outlet or surge protector.
2. Move the POWER switch on the rear of the projector to the ON position.
3. Press the ⏻ key to ignite the lamp. The lamp will light slowly.
4. To raise or lower the image, tilt the flip mirror accordingly.
5. Rotate the ring at the base of the projector lens to focus the image.

Downloaded from Projector.com

THE CYCLOPS REMOTE CONTROL AND CONTROL PANEL

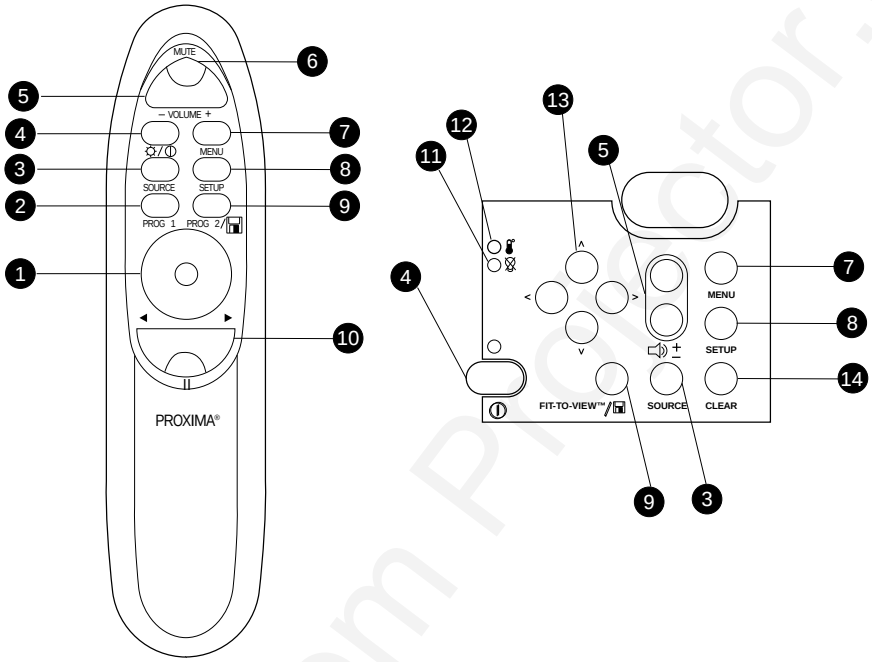

Figure i-8, The Cyclops remote control and control panel

KEY	FUNCTION
1 MouseDisk (remote only)	• Emulates a left-button mouse click when you press the center. • Acts like an arrow key when you press the edges. • Toggles between Draw and Move modes in the LightBoard™ tool, and also controls the mouse pointer. • In MediaExpress menus, controls the mouse pointer.
2 Prog 1 (remote only)	Performs the function you define in the Preferences menu.
3 Source	Cycles through the various input sources, including video, computer, and MediaExpress mode.
4 ☼/⏻ (Lamp on/off)	• On the remote, press this key once to clear to a black screen. The lamp will stay on. • On both the remote and control panel, ⏻ turns the lamp off if you press it for more than two seconds. On the control panel, the green indicator light above this key illuminates when the lamp is on.

Downloaded from Projector.com

KEY	FUNCTION
5 ± (Volume **+/-**)	Adjusts the audio level.
6 Mute (remote only)	Mutes the audio, or returns the sound.
7 Menu	Turns the menus on and off.
8 Setup	Adjusts the sync, contrast, brightness, tint, and image position settings.
9 Fit-To-View/ /Prog 2	• In computer or video mode, the Fit-to-View key enlarges or compresses the image to fit the projector's 1024 x 768 resolution. To return the image to its original size, press this key again. • In MediaExpress mode, this key selects the current object. • Set the function of the Prog 2 key (remote only) in the Preferences menu.
10 Reverse/ Forward/Pause ◀ II ▶ (remote only)	• In a MediaExpress presentation, Reverse/Forward move to next/previous slide. • Pause suspends the current slide in a MediaExpress presentation. • Pause opens See-it/Show it in Cyclops F/X.
11 Replace Lamp (control panel only)	• Flashes for 90 seconds after turning off the lamp. • Illuminates when the recommended lamp life is exhausted.
12 Overtemp indicator (control panel only)	Illuminates if the projector is too hot, or if the fans malfunction, indicating that the lamp was automatically turned off. If you experience an overtemp condition, see *Chapter 6, Troubleshooting* for more information.
13 Arrow keys (control panel only)	• Move right/left among menus; move up/down on menu items. • In MediaExpress presentations, right/left move to next/previous slide. • In MediaExpress menus, these keys navigate the menus. • Pans and positions the computer image.
14 Clear (control panel only)	Clears the display to white, for use with overhead transparencies. Clears the screen to black if you press it for two seconds.

Downloaded from Projector.com

Chapter 1

Setting up your projector

OPENING THE PROJECTOR

To open the projector:

1. Place the projector on a solid, flat surface.
2. Position the projector so that the side with the handle is facing the projection screen. The connector panel will be facing away from the projection screen (see Figure 1-1).

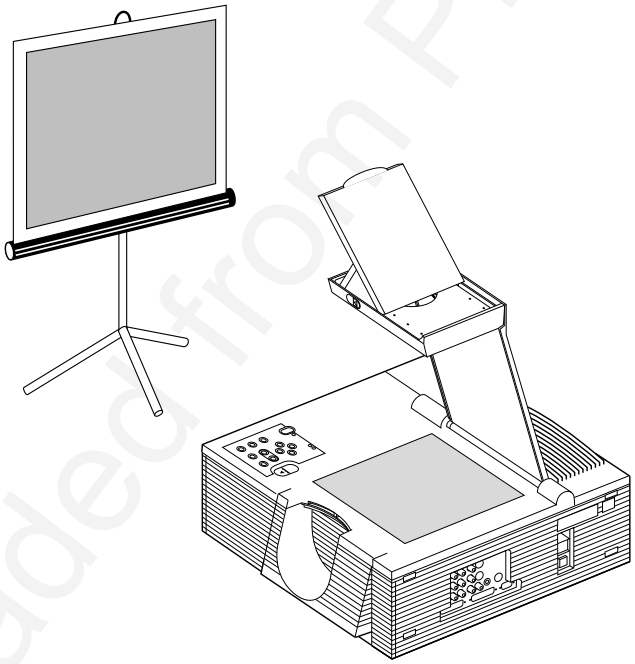

Figure 1-1, Positioning the projector in front of the projection screen

Downloaded from Projector.com

3 The projector must be parallel to the floor. If you're using a media cart, make sure the wheels are locked to prevent it from moving.

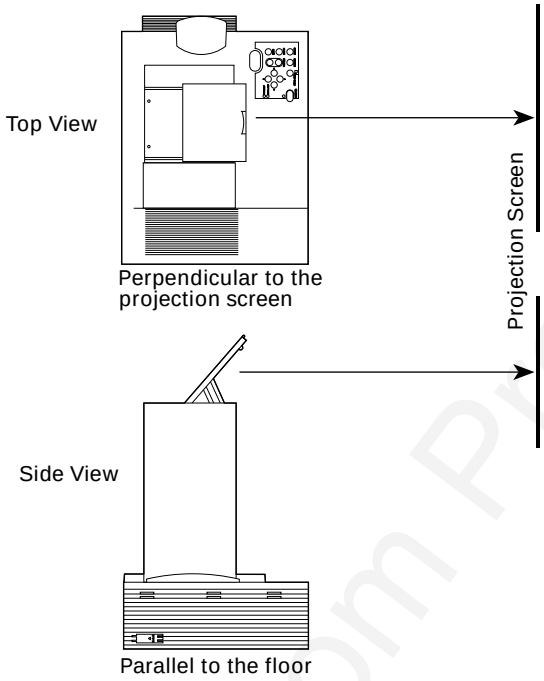

Figure 1-2, Top view and side view of the projector

4 Locate the arm release lever beside the control panel, on the top of the projector (see Figure 1-3). Slide it gently in the direction of the arrow.

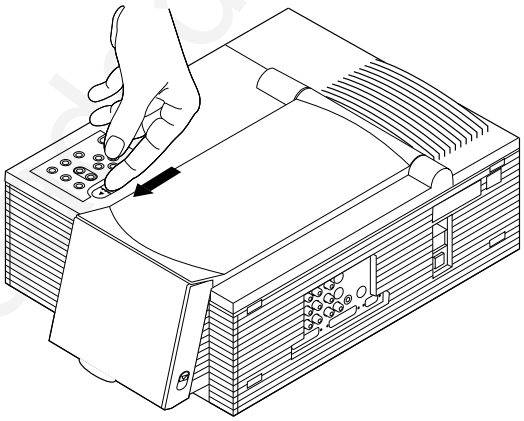

Figure 1-3, Pressing the lever to release the arm

Downloaded from Projector.com

5 The arm pops up. Gently lift the arm. It raises automatically until it is fully extended. *Do not force the arm further.*

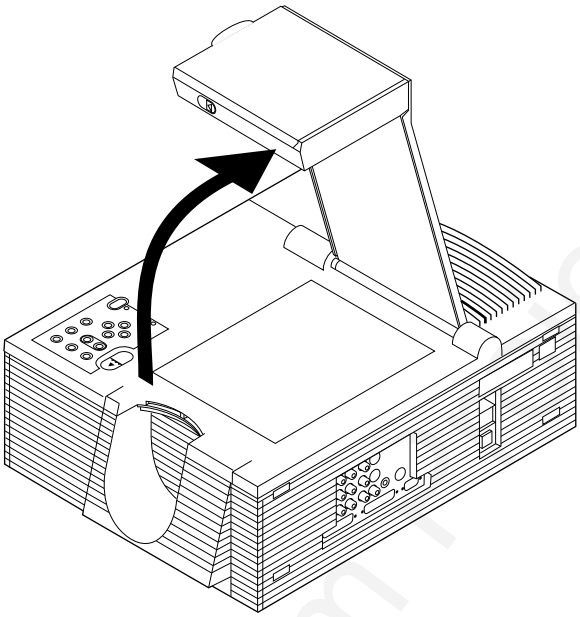

Figure 1-4, The arm pops up

6 Locate the flip mirror release lever on the top of the arm. Press it in the direction of the arrow while pulling up on the lift tab. This releases the mirror.

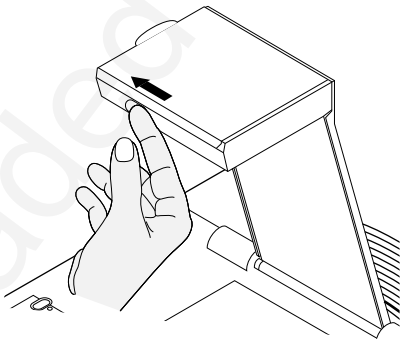

Figure 1-5, The flip mirror release lever

Downloaded from projector.com

7 Gently tilt the mirror open to approximately 45 degrees (you can adjust the angle of the mirror later, to raise or lower the projected image).

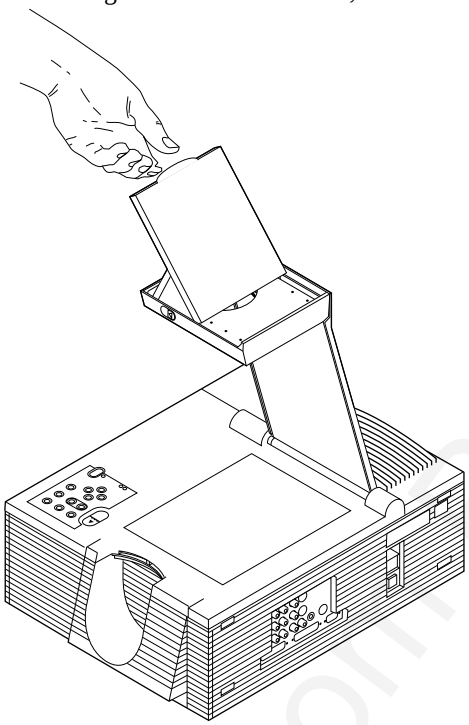

Figure 1-6, Opening the flip mirror

CAUTION! *Never push on or force the mirror. Always use care when opening the mirror assembly. Avoid touching the surface of the mirror with your fingers.*

Closing the projector

To close the projector, reverse the opening procedures.

1 Tilt the mirror down into the arm until it latches.

2 Gently swing the arm down until it clicks into place. The latch should click when the arm is completely stowed.

Moving the projector

You should securely close the projector and disconnect all cables before moving it. The projector has a recessed carrying handle on its side. To access the handle, just push one side of it in, and the other side will automatically release (see the next figure).

Downloaded from Projector.com

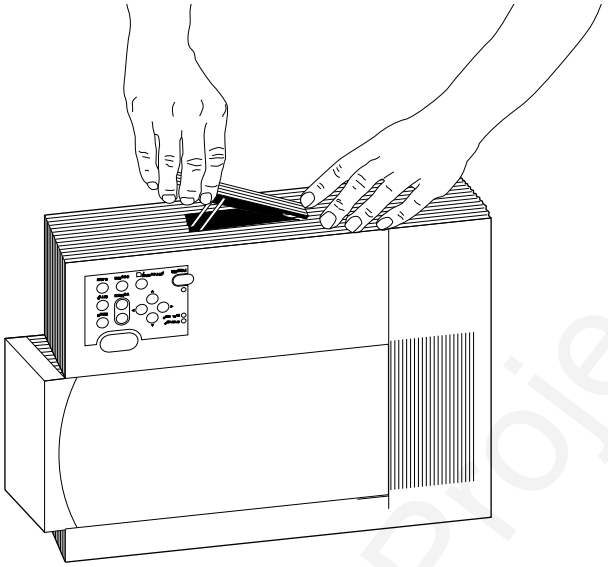

Figure 1-7, Accessing the recessed handle

If you must move the projector while it is open, grasp it securely at the sides by the lower part of the housing to support its weight.

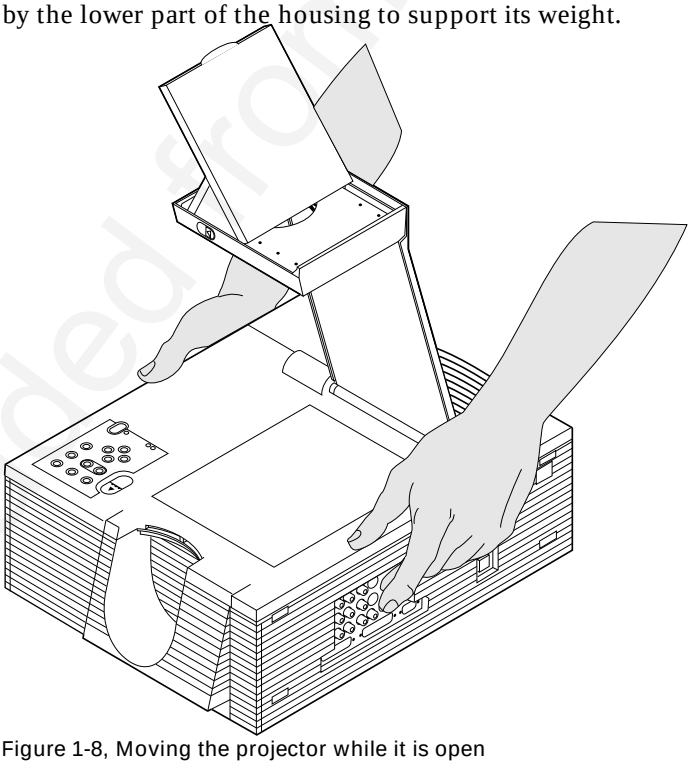

Figure 1-8, Moving the projector while it is open

Downloaded from Projector.com

TURNING ON THE PROJECTOR

The projector and the external monitor (if you're using one) should be turned on *before* you turn on your computer. This ensures that the computer properly senses the display during it's start-up process.

On the rear panel of the projector there is a power cord receptacle and a power switch.

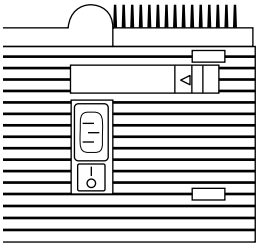

Figure 1-9, The power switch

To turn on the projector:

1. Plug the power cord into the projector's power receptacle.
2. Plug the other end of the power cord into a properly grounded electrical outlet.
3. Move the POWER switch to the ON position.
4. Press the ⏻ key to turn on the lamp. The lamp will ignite slowly.
5. If you haven't already done so, connect the projector to your computer and external monitor (if you're using one).
6. Turn on your computer and external monitor (if you're using one).

You should see a projected image of your computer screen. You'll see how to focus the image shortly.

Note: *The DP9100 consumes 800 watts of power. Most circuits and surge protectors support 1200 watts. Make sure to connect any peripheral equipment to a separate circuit or surge protector.*

Downloaded from Projector.com

CONNECTING THE PROJECTOR TO YOUR COMPUTER

Take a moment to review the projector's connector panel.

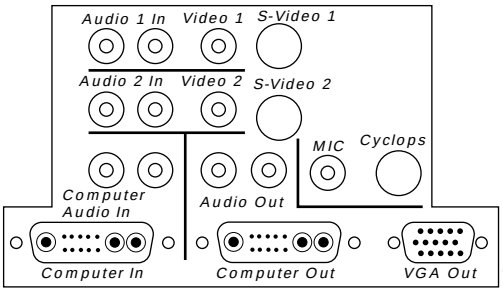

Figure 1-10, The connector panel

PORT	CONNECTS TO...	...WITH THIS CABLE
AUDIO 1 In **AUDIO 2 In**	Left and right ports connect to a video source, brings audio into the projector.	Composite audio/video cable (C497-6).
VIDEO 1 **VIDEO 2**	Connects the projector to a video camera, laserdisc player, television, or a VCR (NTSC/ PAL/SECAM source) to bring video from these sources into the projector.	Composite audio/video cable (C497-6).
S-Video-1 **S-VIdeo-2**	Connects the projector to an S-Video source to bring video into the projector.	S-Video cable (C466-6).
COMPUTER AUDIO IN	Left and right ports connect to the computer, brings audio into the projector.	Computer audio cable (C498-6).
AUDIO OUT	Connects to external speakers or an external sound system to send stereo audio out.	Audio cable.
CYCLOPS*	Connects to the computer to use the Cyclops F/X software or the optional Cyclops interactive pointer system.	RS-232 cable (PC C936-6), (MAC C470-6), (Workstation C902-6 and C903-6).

* Instructions for connecting to this port are also included in the *Cyclops User's Guide.*

Downloaded from Projector.com

PORT	CONNECTS TO...	...WITH THIS CABLE
MIC	Connects an external microphone to the projector.	External microphone cable.
COMPUTER IN	Connects to the computer to bring computer video into the projector.	PC: C800-6, Mac: C802-6, Sun: C801-6 SGI: C943-6, DEC: C948-6.
COMPUTER OUT	Connects a workstation monitor to the projector for simultaneous display.	Existing monitor cable. You may also need to use an adapter.
VGA OUT	Connects a PC or Macintosh monitor to the projector for simultaneous display.	Existing monitor cable. You may also need to use an adapter.

To connect the DP9100 to virtually any PC, Macintosh, or workstation, choose the Proxima cable(s) that matches your existing computer-to-monitor connection.

You normally need only one Proxima cable. This cable is used to connect the projector to your computer's video output connector. Use the existing computer-to-monitor cable if you also want to connect your monitor.

You can connect the computer-to-projector cable with the projector and computer power on. Available cables include:

- 13C3 to LCD Connector Cable (C801-6)
- VGA to LCD Connector Cable (C800-6)
- Mac to LCD Connector Cable (C802-6)
- Mac to LCD Adapter (C804-0)
- SGI 13C3 to LCD Connector Cable (C943-6)
- SGI to LCD Adapter (C947-12)
- DEC 3C3 to LCD Connector Cable (C948-6)
- DEC 3C3 to LCD Adapter (C947-10)
- Optional BNC Block to LCD Connector Cable (C942-2)
- Optional BNC to LCD Connector Cable (C803-6)

Computer video always connects to the COMPUTER IN connector (13C3) on the projector.

Downloaded from Projector.com

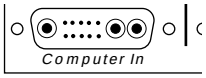

Figure 1-11, The projector's COMPUTER IN connector

You can display data on a separate monitor in addition to the projector. Computer out connections can be made with the projector and computer power on.

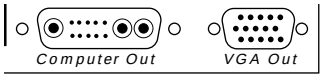

Figure 1-12, Projector's video output connectors

Projecting without an attached monitor

Some display cards rely on sense line information from the monitor to configure themselves for the correct display resolution. The absence of sense line information causes some display cards to output a default video signal, and actually prevents some video cards from outputting video at all.

If you connect the projector to a computer without a monitor, power up your system and check to see if the display resolution is acceptable. If it is not, you will need to set the sense lines to make the projector emulate a monitor (see *Appendix C: Sense Lines*).

Downloaded from Projector.com

PCs

1. Disconnect your computer-to-monitor cable at the computer end.
2. Connect the free end of the monitor cable to the VGA OUT connector on the projector.
3. Use the Proxima VGA to LCD connector cable (C800-6) between the projector and the computer. Connect the end of the cable marked “LCD” to the projector’s COMPUTER IN connector, and the end marked “COMPUTER” to the computer’s video output connector.

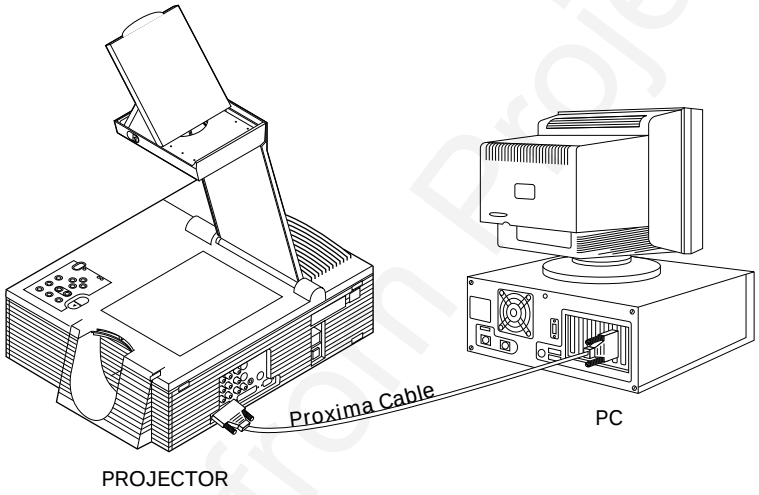

Figure 1-13, PC video out connection to projector

Macintosh computers

Connecting a Macintosh monitor requires the Proxima VGA/MAC (C804) adapter and the existing monitor cable. Use the Proxima adapter only.

1. Disconnect your computer-to-monitor cable at the computer end.
2. Connect the free end of the monitor cable to the Proxima VGA/MAC adapter.

Downloaded from Projector.com

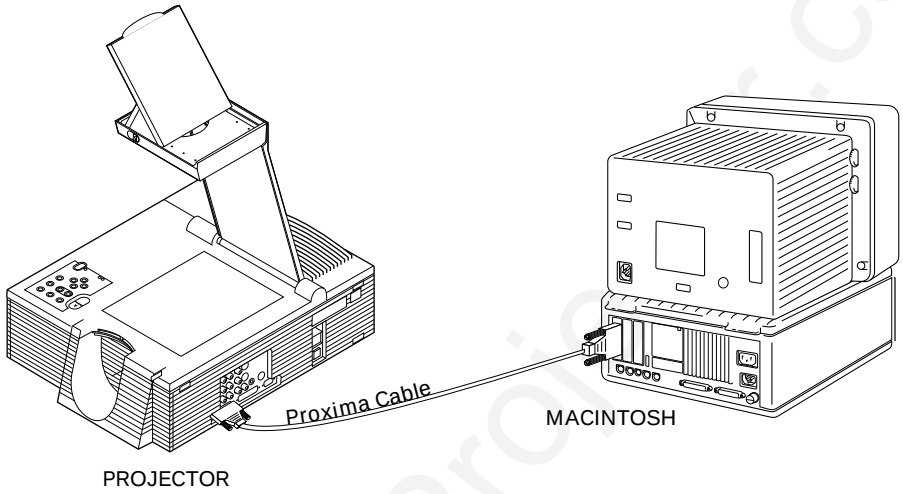

Figure 1-14, The Proxima Mac to LCD adapter

3 Connect the free end of the Mac to LCD adapter to the projector's VGA OUT connector.

Note: *Macintosh users who do not connect an external monitor may need to set DP9100 sense lines to achieve the desired display resolution. See Appendix C: Sense Lines for more information.*

4 Use the Proxima MAC to LCD connector cable (C802-6) between the projector and the computer. Connect the end marked "LCD" to the projector's COMPUTER IN connector, and the end marked "COMPUTER" to the computer's video output connector.

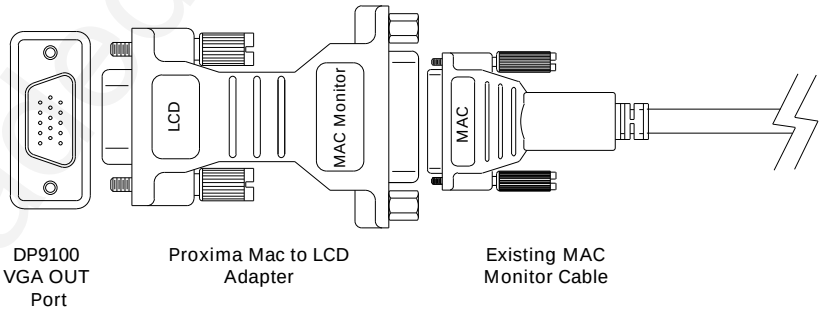

Figure 1-15, The Proxima Mac to LCD Adapter

Downloaded from Projector.com

Notebook computers

Use the appropriate Proxima video cable to connect your notebook to the projector:

1. Connect the end of the Proxima video cable marked “COMPUTER” to the external monitor connector on your notebook (or to the video cable adapter supplied with your notebook).
2. Connect the end of the Proxima video cable marked “LCD” to the COMPUTER IN connector on the projector.

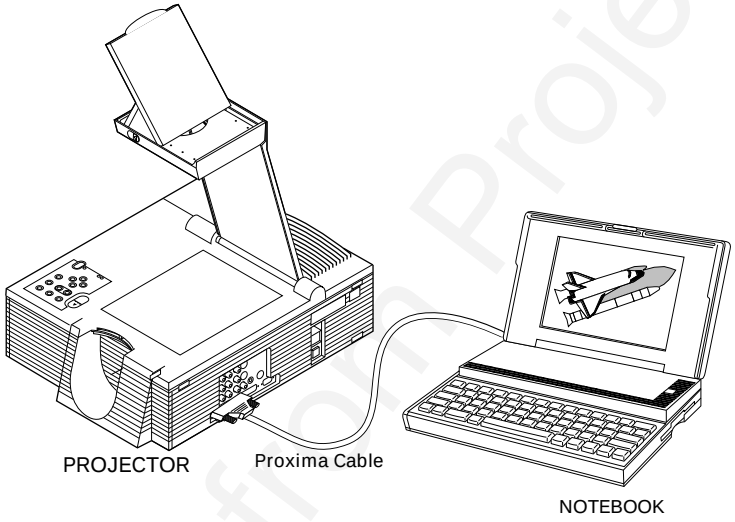

Figure 1-16, Notebook connections

Note: *Some notebooks require that you press a combination of keys or use a control panel to set the projector as an external monitor. Refer to your notebook manual for more information.*

Downloaded from Projector.com

Workstations

13C3 Video Connections (except Silicon Graphics workstations)

If your workstation has a 13C3 connector at the computer video port:

1. Disconnect your computer-to-monitor cable at the computer end.
2. Connect the free end of the monitor cable to the projector's COMPUTER OUT connector.
3. Use the Proxima 13C3 to LCD Connector Cable (C801-6) between the projector and the computer. Connect the end marked "LCD" to the projector's COMPUTER IN connector, and the end marked "COMPUTER" to the computer's video output connector.

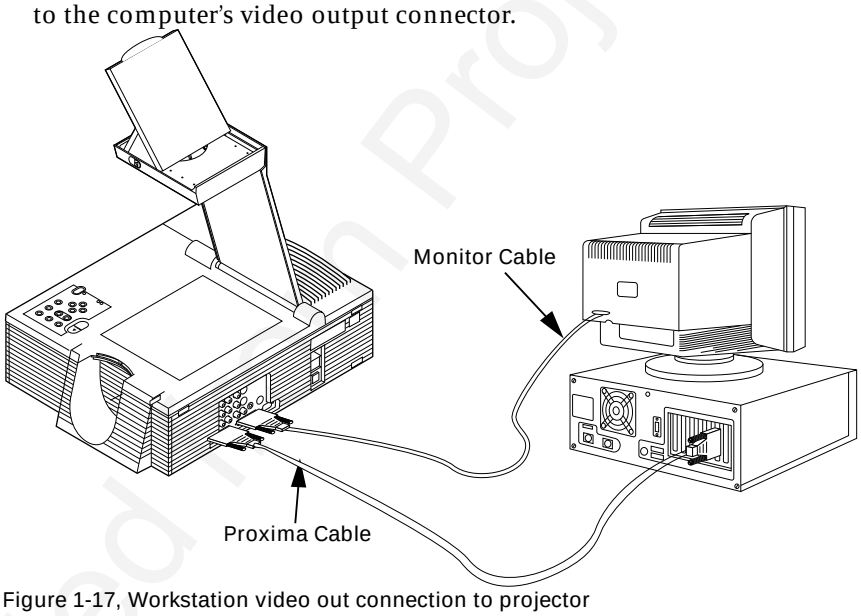

Figure 1-17, Workstation video out connection to projector

Downloaded from Projector.com

Silicon Graphics 13C3 Video Connections

If you have a Silicon Graphics workstation with 13C3 connectors at the computer and monitor video ports:

1. Disconnect your computer-to-monitor cable at the computer end.
2. Connect the free end of the monitor cable to the Proxima SGI to LCD adapter (C947-12).
3. Connect the free end of the SGI to LCD adapter to the projector's COMPUTER OUT connector.

Note: *SGI workstation users who do not connect an external monitor will need to set DP9100 sense lines to achieve the desired display resolution. Refer to Appendix C: Sense Lines for more information.*

4. Use the Proxima SGI 13C3 to LCD connector cable (C943-6) between the projector and the computer. Connect the end marked "LCD" to the projector's COMPUTER IN connector, and the end marked "COMPUTER" to the SGI workstation's video output connector.

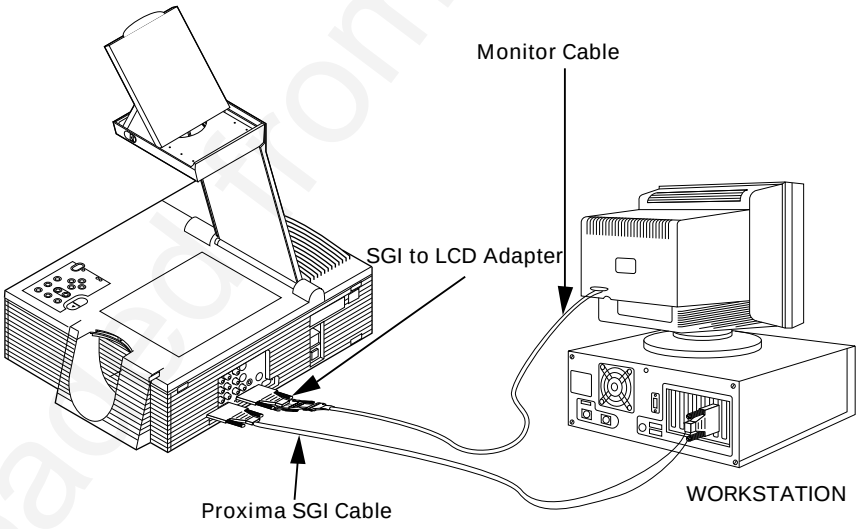

Figure 1-18, Silicon Graphics workstation connections

Downloaded from Projector.com

DEC 3C3 Video Connections

If you have a DEC workstation with 3C3 connectors at the computer and monitor video ports:

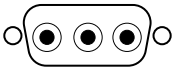

Figure 1-19, 3C3 connector

1. Disconnect your computer-to-monitor cable at the computer end.
2. Connect the free end of the monitor cable to the Proxima DEC 3C3 to LCD adapter (C947-10).
3. Connect the free end of the DEC 3C3 to LCD adapter to the projector's COMPUTER OUT connector.
4. Use the Proxima DEC 3C3 to LCD connector cable (C948-6) between the projector and the computer. Connect the end marked "LCD" to the projector's COMPUTER IN connector, and the end marked "COMPUTER" to the workstation's video output connector.

BNC Video Connections

If your workstation does not have a 13C3 video port connector at the computer video port, but has a BNC connector at the monitor, you will need the optional Proxima BNC cables.

1. Note which BNC connectors are currently used with the monitor. (The R, G, and B connectors are always used, but the way the H and V connectors are used depends on your configuration.) Disconnect your computer-to-monitor cable at the monitor (BNC) end.
2. Connect the free BNC end to the optional Proxima BNC Block to LCD Connector Cable (C942-2), connecting the same BNC connectors used on the monitor. Plug the "LCD" end of the cable into the projector's COMPUTER IN connector.

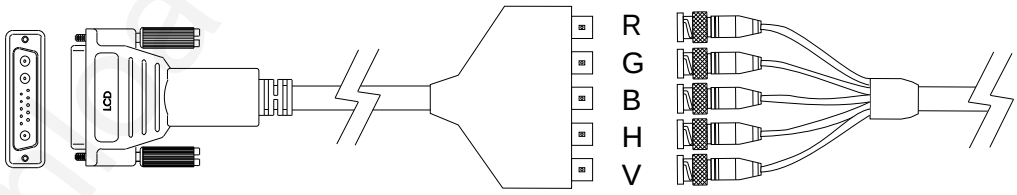

To Projector Computer Video Out

Figure 1-20, Using the BNC Block to LCD connector cable

Downloaded from Projector.com

3 Connect the optional Proxima BNC to LCD Connector Cable (C803-6) between the projector's COMPUTER OUT connector and the monitor's BNC video input. Use the same BNC connections used with the monitor.

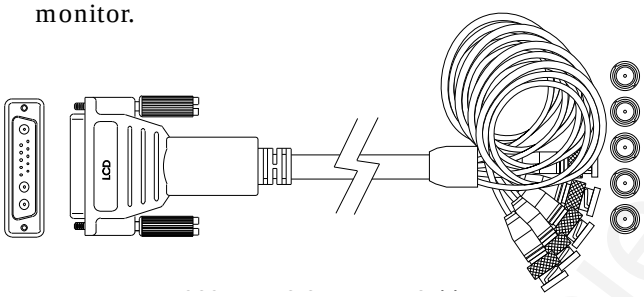

Figure 1-21, BNC to LCD Connector cable

Connecting the Cyclops interactive pointer system

The Cyclops interactive pointer system uses a built-in camera to function like a cordless mouse. With the Cyclops system, you can control your computer's cursor by moving the hand-held wand or optional laser pointer. Instructions for setting up your Cyclops system are included with your Cyclops kit.

Connecting the MediaExpress system

The MediaExpress Image Display System is a hybrid, next-generation product that brings the functionality of computers and projectors much closer together.

The MediaExpress system eliminates the need to connect a computer to the projector. Just save your presentation from whatever application you're using to a special kind of file (called a .PDF file), copy the file on a disk, then place the disk in the MediaExpress disk drive and start the show.

To connect the MediaExpress system to the projector, see the *Installation Card* that came with your MediaExpress package for instructions.

Downloaded from Projector.com

CONNECTING VIDEO AND AUDIO TO THE PROJECTOR

This section shows how to connect audio and video to your projector. The DP9100 has multiple inputs for audio and video. If you are connecting only one audio or video source to your projector, use the VIDEO 1 and AUDIO 1 ports. Make sure that you connect your audio and video to the corresponding group. If you connect video to group one and audio to group two, you won't hear the audio. Although both COMPUTER AUDIO IN and AUDIO IN may be connected simultaneously, only one is active:

- If computer video is selected, COMPUTER AUDIO IN is active.
- If NTSC/PAL/SECAM/S-Video are selected, AUDIO 1 IN is active.

Connecting video from a VCR

The Desktop Projector 9100 can project video from NTSC, PAL or SECAM sources (i.e., VCRs, laserdisc players and video cameras).

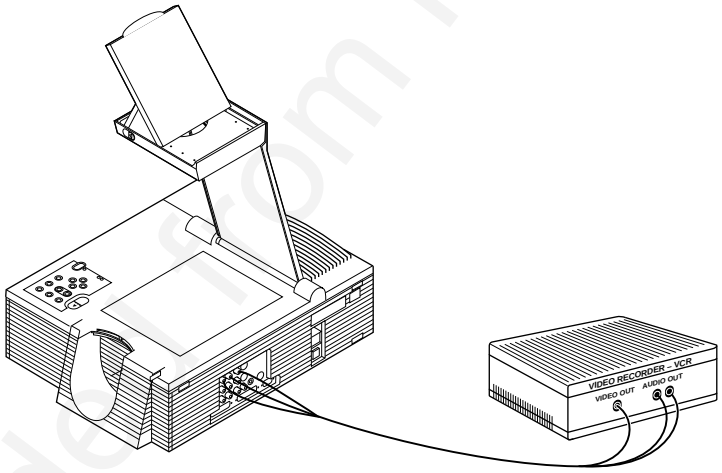

Figure 1-22, The projector connected to a VCR

Downloaded from Projector.com

The Composite Audio/Video cable (C497-6) has a yellow, red, and white RCA plug at each end. To connect an NTSC, PAL, or SECAM source to your projector:

CABLE (C497-6)	PROJECTOR PORT	VCR CONNECTOR
Yellow	VIDEO 1 or 2.	Video Out, To Monitor, etc.
White	AUDIO 1 or 2 IN (white plug).	Left Audio Out.
Red	AUDIO 1 or 2 IN (red plug).	Right Audio Out.

Connecting video from S-Video sources

The Desktop Projector 9100 can also project video from an S-Video source.

1. Connect one end of the S-Video cable (C466-6) to the Video Out connector on the video source. The cable has identical round four-pin connectors on either end.
2. Connect the other end of the cable to the projector's S-VIDEO 1 port.

Connecting audio from the computer

Use the COMPUTER AUDIO IN port to connect audio from a computer.

1. Insert the mini jack end of the computer audio cable (C498-6) into the AUDIO OUT connector of a Macintosh or the sound card of a PC.
2. Insert the RCA jacks at the other end of the computer audio cable into the projector's left and right COMPUTER AUDIO IN ports.

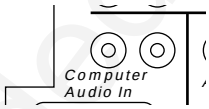

Figure 1-23, Connecting audio from the computer

Connecting a microphone

To use a microphone while projecting an NTSC, PAL, SECAM, S-Video, or computer image, plug an amplified or wireless microphone equipped with a line level output (maximum 1 volt, peak-to-peak) into the MIC port.

Downloaded from Projector.com

Connecting external speakers

The Desktop Projector 9100 contains an internal stereo system consisting of an amplifier and two speakers. Although this system provides high-quality stereo output, a multimedia presentation may require external powered speakers or an external sound system.

When connecting external speakers, use the optional Proxima Powered Loudspeaker System (A55) or a similar system. References in the following procedure are to Figure 1-24.

1. Insert the two RCA plugs on the Mini-jack to RCA cable adapter (C5105) into the projector's AUDIO OUT ports.
2. Connect the other end of the Mini-jack to RCA cable adapter (C5105) to the speaker cable (included with your speakers).
3. Connect speaker A to speaker B using the cables supplied with the speaker system.

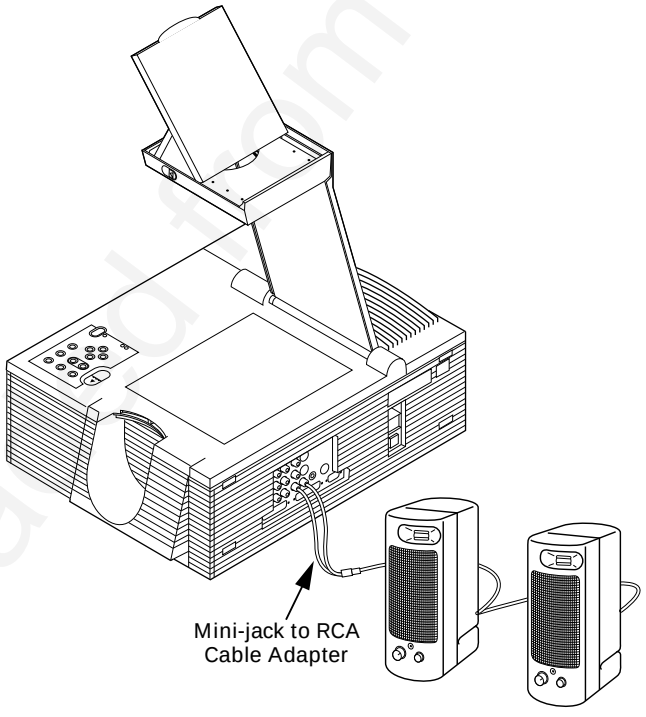

Figure 1-24, Connecting external speakers

Downloaded from Projector.com

Connecting an external stereo system

To connect the projector to an external stereo system:

1. Using the Composite Video/Audio cable (C497-6), insert the white and red RCA plugs into the projector's left and right AUDIO OUT ports.
2. Insert the white and red RCA plugs at the other end of the cable into the external amplifier's left and right AUDIO IN ports.

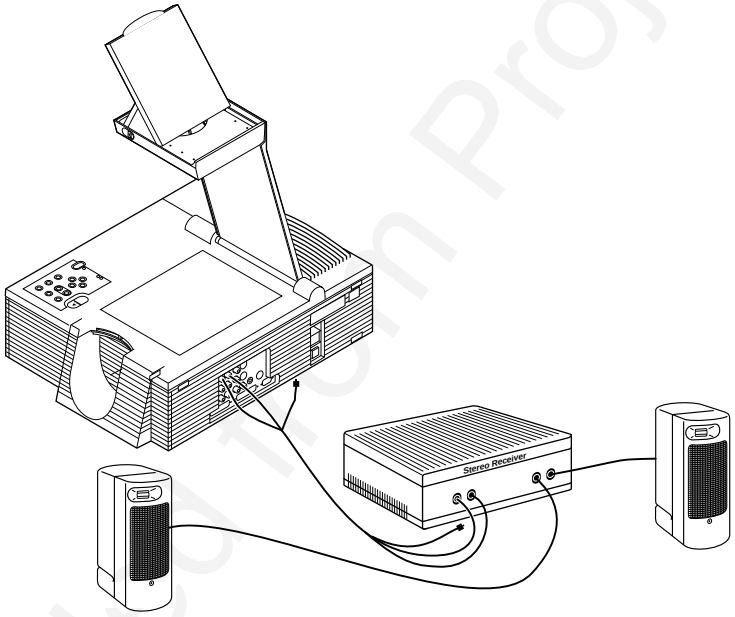

Figure 1-25, Connecting an external stereo system

Downloaded from Projector.com

IMPORTANT PRECAUTIONS

To avoid any potential hazards to the projector, make sure the air intake and exhaust grills are unobstructed. Do not operate the projector if these areas are clogged or blocked.

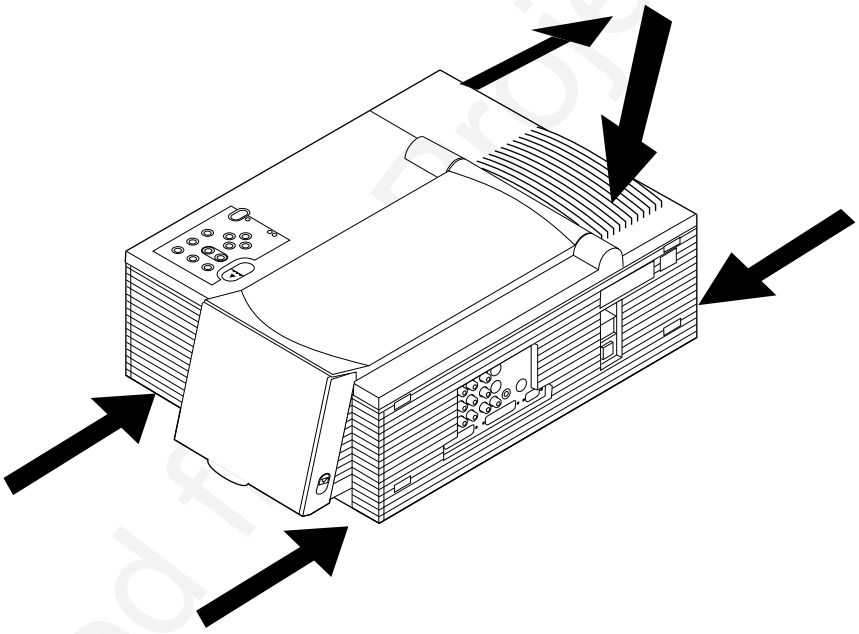

Figure 1-26, Allow sufficient air flow

CAUTION! *The lamp chamber gets very hot during operation, especially the ceramic sockets at each end of the lamp. Be very careful when opening the lamp chamber or changing the lamp. To allow that area to cool down, press the ⏻ key to turn off the lamp and let the fan cool the projector for at least five minutes before you touch any of those components. See* Chapter 5, Maintenance*, for more information.*

Downloaded from projector.com

Turning the lamp on and off

The lamp is off when you first turn on the projector. Press the ⏻ key on the on the Cyclops remote control or control panel to turn the lamp on. The green power indicator light illuminates. It takes a few seconds for the lamp to warm up.

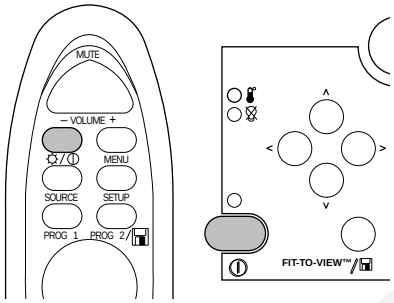

Figure 1-27, The ⏻ key

To turn the lamp off, press and hold the ⏻ key for about two seconds. When you turn the lamp off, the projector's fans will continue to run for about two minutes. Allow the fans to run until they automatically turn off. This will lengthen the lamp life and help ensure that the projector cools properly. Turning the lamp off *does not* turn off the projector. To turn the power off, move the power switch on the back of the projector to the OFF position.

After you turn off the lamp, you can immediately turn it back on within five seconds. If you wait longer than five seconds, you must then wait 90 seconds before turning it back on. This is a built-in feature that helps to prevent lamp damage. Press the ⏻ key again to turn the lamp back on. The lamp illuminates slowly in order to prolong lamp life.

The projector has safeguards built in to protect it from overheating. In the rare event that the projector overheats, the lamp will turn off automatically and the overtemp indicator on the Control Panel will illuminate.

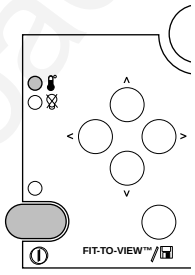

Figure 1-28, The overtemp indicator light

Downloaded from Projector.com

In the unlikely event that an overtemperature conditions occurs, see *Chapter 6, Troubleshooting* for information on restarting your projector.

ADJUSTING THE IMAGE

Raising or lowering the image

To raise or lower the projected image, tilt the mirror on top of the arm up (to move the image higher) or down (to move the image lower).

Focusing the image

To focus the image, rotate the ring just below the projection lens, beneath the mirror, until the image is sharp and clear.

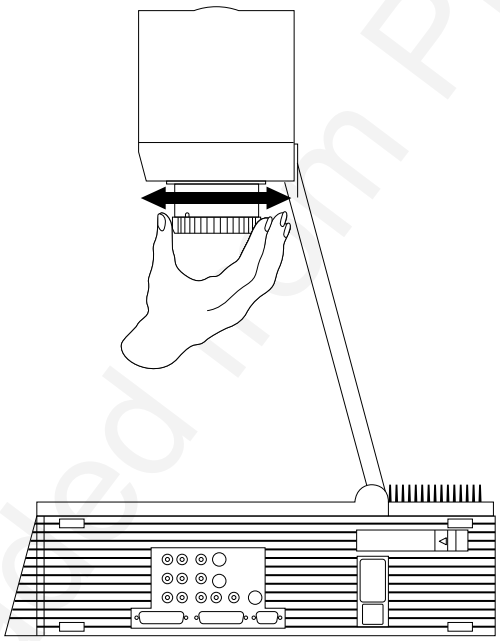

Figure 1-29, Rotating the focus ring

Downloaded from Projector.com

Correcting keystoning

The normal projected image will have a rectangular shape. An image is keystoned when it appears trapezoidal.

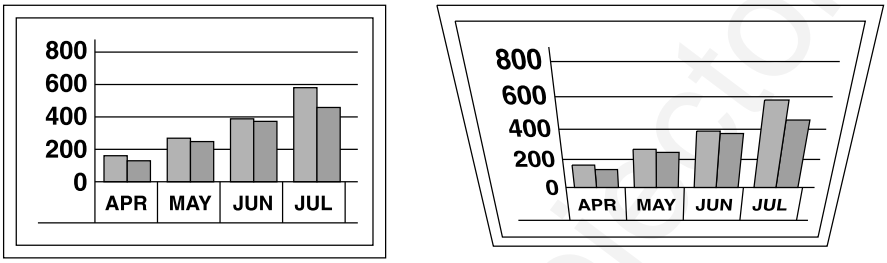

Figure 1-30, Normal image vs. keystoned image

Keystoning occurs when the front of the projector is not perpendicular to the projection screen (the vertical plane) or when the projector is not parallel to the floor (the horizontal plane). Keystoning can also occur when the projector is tilted sideways.

To correct keystoning, make sure that the projector is at a right angle to the projection screen in the horizontal plane (see Figure 1-30).

To project images high enough for the entire audience to view, the DP9100 has a built-in 4.5-degree correction for keystoning.

Image size

The size of the projected image depends on the distance between the projector lens and the projection screen. This table shows the projected image size, measured diagonally, based on this distance.

DISTANCE FROM SCREEN	DIAGONAL IMAGE SIZE
4 ft/1.2 m	46 inches
6 ft/1.8 m	69 inches
8 ft/2.4 m	92 inches
10 ft/3.0 m	115 inches
12 ft/3.6 m	138 inches

Downloaded from projector.com

Chapter 2

Using your projector

The Desktop Projector 9100 was designed with ease of use and simplicity in mind. With the Cyclops remote control or the control panel, most of the common functions are right at your fingertips.

To perform most of the actions you'll need during your presentation, such as adjusting or muting the volume and proceeding from one slide to the next, just press a button on the Cyclops remote control or the control panel.

This chapter describes keys on the Cyclops remote control and control panel and their associated functions. It also describes how to use the various projector and menu settings.

USING THE CYCLOPS REMOTE CONTROL AND CONTROL PANEL

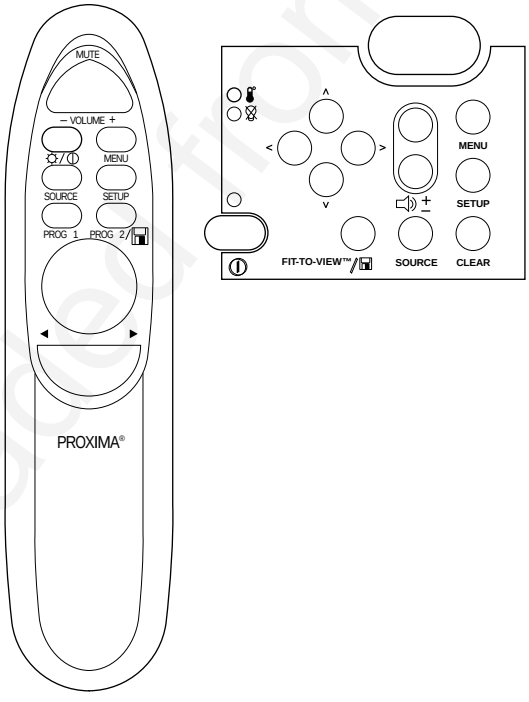

Figure 2-1, The keys on the remote control and control panel

Downloaded from Projector.com

Source key

Use the Source key to switch between the various video input sources you connect, such as the computer video input, NTSC/PAL/SECAM video input, S-Video input, or MediaExpress input.

Setup key

Use the Setup key to make your pre-presentation adjustments, such as sync, brightness, contrast, tint, and image position.

(Volume)

Use the Volume keys to adjust the volume from the projector's internal speakers and any connected external speakers.

Prog 1 and Prog 2 keys

Use these keys to perform the function you define in the Preferences menu. In the MediaExpress dialog boxes, the Prog 2 key selects the highlighted item.

Reverse/Forward/Pause

In a MediaExpress presentation, these keys reverse or advance to the next slide. The Pause key suspends the timer for a slide during a MediaExpress presentation. It also opens See-it/Show-it in Cyclops F/X.

MouseDisk

When you press the center of the MouseDisk, it acts like a mouse click. When you press the edges of the MouseDisk, it acts like an arrow key.

In the LightBoard tool, this key toggles between Draw and Move modes. It also controls the mouse pointer. In MediaExpress dialog boxes, press the edges of this button to move the mouse pointer, and the center to select options.

Mute

Use the Mute key to turn off the sound from the internal or external speakers. Press it again to return the sound.

Downloaded from Projector.com

Menu

Press the Menu key to activate the onscreen menus. Press it again to exit the menus.

/ ⏻ (Lamp on/off)

This key turns the lamp on and off. On the remote, press and release this key once quickly to display a black screen. To turn the lamp off, press and hold this key for at least two seconds. This key does NOT turn off the projector.

Arrow keys (control panel only)

When the projector menus are displayed, the arrow keys on the Control Panel move the mouse pointer from menu to menu (up and down arrow) and to items on the current menu (left and right arrow).

When the projector menus are not displayed, these keys pan or position the image in computer or video mode.

When the MediaExpress menus are displayed, these keys navigate those menus and dialog boxes.

Fit-To-View/ 💾 (MediaExpress)

The Fit-To-View key enables you to fit a projected image on the screen while your system displays at a higher resolution. Press this key to intelligently scale images larger than 1024 x 768 or to enlarge 640 x 480 images. Press this key a second time to return to the normal display.

In MediaExpress mode, this button has multiple functions. See your MediaExpress *User's Guide* for more information.

Clear

Press the Clear key to clear the screen to a bright white background. This is especially useful when you want to show a transparency during your presentation. Press and hold the Clear key for about two seconds to clear the screen to black. To redisplay video, press the Clear key again.

Downloaded from Projector.com

(Overtemp indicator light)

This light illuminates if the projector becomes too hot or when one of the fans malfunctions. When this light is illuminated, the lamp automatically turns off. In the unlikely event of an overtemperature condition, see *Chapter 6, Troubleshooting* for more information.

(Lamp indicator light)

This light illuminates when the lamp needs to be replaced. It also flashes for about 90 seconds after you turn off the lamp.

SWITCHING BETWEEN INPUT SOURCES

With some presentations, you'll have multiple input sources connected to the projector. Input sources are VCRs, computers, laserdisc players, the optional MediaExpress system, or any piece of hardware that produces images that you want to project through your projector. For example, you may have a VCR, the MediaExpress system, and your computer connected.

To switch between sources, just press the Source key. The Source key cycles through the various sources that are currently connected to your projector.

USING THE MENUS

Before starting your presentation, you'll want to fine-tune the image to get the sharpest, clearest image possible. The handful of settings you'll use the most are very easy to access. Just press the Setup key and make your adjustments. For the settings you use less frequently, access the projector's menus to make your adjustments. To open the menus, press the Menu button once.

Each menu command offers a list of related settings. Each setting is described in Chapter 3. For now, it's important to know how to choose a menu and adjust the various settings.

To navigate through the menus, press the edges of the MouseDisk on the remote control or use the optional Cyclops wand or laser pointer. (On the projector's control panel, press the up and down arrow keys.) As the cursor moves up and down the main menu, additional options appear to the right.

Downloaded from Projector.com

For most settings, you make incremental adjustments by moving a slide bar. To move a slide bar, press the edges of the MouseDisk, press the up and down arrow keys on the projector's control panel, or use the optional Cyclops wand or laser pointer.

Changing the language on the menus

To change the menus to a different language, choose **Language** on the Preferences menu. Then choose the language you prefer. You can select between English, Spanish, French, German, and Italian. The menus instantly change to the language you selected.

Saving your settings

Your current settings are saved when you exit the menus. Your settings will also be saved if you hold the ⏻ key for two seconds (to turn off the lamp).

If two or more presenters want to save their settings separately, see *Advanced Features*.

Reverting to the factory defaults

If you want to revert to the original factory settings for a specific computer source, choose **Image**, **Factory Defaults**, **Reset**.

To reset the projector itself, press the Clear key, then press each of the four arrow keys on the projector's control panel once. The power LED indicator will blink twice to indicate the projector has been reset.

ADJUSTING THE IMAGE

Press the Setup key to access most of the settings you need to adjust the image.

Note: *The choices on the Setup menu vary, depending on your current input source.*

Adjusting the brightness

To adjust the brightness, press the Setup key until the Brightness slider appears. Press the edges of the MouseDisk, use the optional Cyclops wand or laser pointer, or press the left and right arrow keys to move the slider.

You can also adjust the brightness by accessing the projector menus and choosing **Bright** from the Image menu.

Downloaded from Projector.com

Adjusting the contrast

To adjust the contrast, press the Setup key until the Contrast slider appears. Press the edges of the MouseDisk, use the optional Cyclops wand or laser pointer, or press the left and right arrow keys to move the slider.

You can also adjust the contrast by accessing the projector's menus and choosing **Contrast** from the Image menu.

Correcting shimmering or streaks

If your projected image has horizontal streaks, or seems to "shimmer" slightly, adjust the Sync setting. (This setting is only active when the source is your computer.)

Press the Setup key until the Sync slider appears. Press the edges of the MouseDisk, use the optional Cyclops wand or laser pointer, or press the left and right arrow keys to move the slider. Repeat until the streaks are gone.

You can also adjust the sync by accessing the projector's menus and choosing **Sync** from the Image menu.

Correcting vertical banding

If the projected image has vertical black lines or bands, adjust the Dot Clock setting on the Image menu to eliminate them. Adjust the slider so that the bands get wider. Continue to adjust the slider until the bands disappear. (This setting is only available when the source is your computer.)

Adjusting the color tint and saturation

To correct the tint, press the Setup key and adjust the slide bar for the Tint setting (availability depends on your current input source).

If you prefer, you can also adjust the Red, Green and Blue settings on the Image menu (while the computer or the MediaExpress system is the input source) or the Tint setting (while video or S-Video is the input source).

Adjusting image position

To move the onscreen image, use the arrow keys on the control panel or press the Setup key and adjust the slide bar for Hor. Pos (Horizontal Position) or Vert. Pos. (Vertical Position). These settings can also be found on the Advanced menu.

Downloaded from Projector.com

Switching to rear projection mode

To switch to rear projection mode (projecting from *behind* the projection screen instead of *in front of* the screen), choose **Projection**, **Rear** from the Projector menu.

ADJUSTING THE AUDIO

You can adjust the volume from the Cyclops remote control, the control panel, or the menus. The Audio menu contains additional audio controls.

Displaying and hiding the volume indicator

You can display a volume indicator while you increase or decrease the volume of the internal speakers. To display the volume indicator, choose **Preferences**, **Onscreen**, **Display**. To suppress this visual indicator, set **Onscreen** to **Hide**.

Adjusting the volume

To adjust the volume of the internal speakers and any external speakers you've connected, press the plus (+) or minus (–) Volume key on the remote or control panel. You can also make your adjustments through the Audio menu.

Muting the audio

To mute the audio, press the Mute key on the remote, or choose **Mute** from the Audio menu.

To turn the sound back on, press the Mute key a second time or choose **Mute**, **Normal** from the Audio menu.

Adjusting bass and treble

To adjust the level of bass or treble, choose the corresponding command on the Audio menu, then move the slide bar in the appropriate direction.

Downloaded from Projector.com

Adjusting fade and balance

The fade slider allows you to choose between the projector's internal speakers and an external loudspeaker system like the Proxima Powered Loudspeaker System (A55). The balance slider allows you to control the level of sound between the left and right sides of your sound system.

To adjust the fade and balance, choose the corresponding command on the Audio menu, then move the slide bar in the appropriate direction.

Adjusting the volume of the microphone

To increase or decrease the volume of the microphone, choose **Mic. Volume** from the Audio menu, then move the slide bar in the appropriate direction.

Switching between stereo and monaural mode

To switch between stereo and monaural mode, choose **Audio Mode** from the Audio menu, then choose the appropriate setting.

ADJUSTING REMOTE MOUSE TRACKING

Use this setting to adjust how fast the pointer moves. To increase or decrease the remote mouse tracking, choose **Mouse Tracking** from the Tools menu and move the slider in the appropriate direction.

PRESENTATION FEATURES

Once you've adjusted the image and audio settings, you're ready to start your presentation. This section describes some of the features of the DP9100 that you'll want to use during your presentations.

Using the LightBoard tool

The LightBoard™ tool is a unique feature that lets you draw on or annotate a projected image. You can choose from three styles:

- Overlay lets you highlight or draw on top of the projected image.
- WhiteBoard clears the screen to provide a bright background for drawing.
- BlackBoard clears the screen to provide a dark background for drawing.

To use the LightBoard tool:

1. Open the menus and choose **Tools**.

Downloaded from Projector.com

2 From the Tools menu, choose **LightBoard** mode, then specify whether you want the **Overlay**, **WhiteBoard**, or **BlackBoard**.

3 From the Tools menu, choose **LightBoard**, **On**. The Draw toolbar appears in the upper left corner of the projected image. It has four buttons:

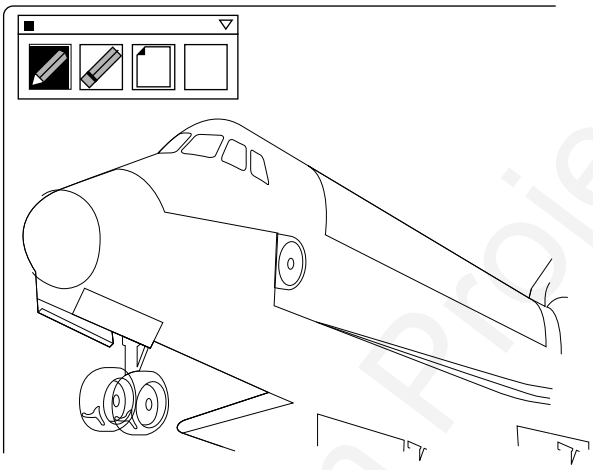

Figure 2-2, The Draw toolbar

BUTTON	FUNCTION
	Click this button to select the Drawing tool.
	Click this button to select the Eraser. You can erase any of your annotations.
	Click the Clear All button to erase all previous annotations.
	Click this button to select a new color. This button shows the currently selected color.

Note: *If you're using the optional Cyclops interactive pointer system, you can also click above the image to activate the LightBoard tool.*

Downloaded from Projector.com

4 Select one of these buttons, then use the Cyclops wand, laser pointer, or the MouseDisk to draw on the projected image.

To open the color palette:

1 Click the **Color box** or the icon in the upper right corner of the projected image. Eight color selection boxes appear.

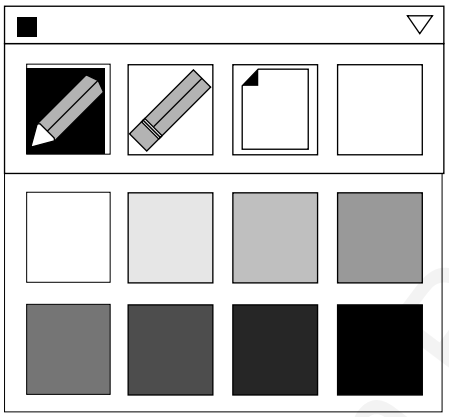

Figure 2-3, The Color selection boxes

2 Click the color you want to use, then click the **Color box** or icon again to hide the color selection boxes.

To draw, click and hold the MouseDisk for about two seconds, then release. Use the edges of the MouseDisk to draw on the screen. When you are in draw mode, the cursor will be black. When you are in move mode, the cursor will be white.

To draw with the optional Cyclops interactive pointer system, click and hold the wand button while you move the cursor around the screen. Release the button to end the drawing.

You can move the Draw toolbar to another spot on the projected image. Just click and hold the title bar of the toolbar, drag it to a new location, and release the button. See *Programming the Cyclops remote control* on page 2-12 for more information.

When you finish using the LightBoard tool, click the close box in the upper left corner of the Draw toolbar.

Downloaded from Projector.com

If you find that you use LightBoard features frequently, consider programming either the Prog 1 or Prog 2 key, so you can access the LightBoard tool with the press of a key.

Setting the timer (for audience intermission)

The DP9100 includes a break timer, for lunch breaks, intermissions, question and answer sessions, or any other timed pause. Your audience will see a "countdown" of the number of minutes remaining.

To use the timer, first set the length of the break. Choose **Tools**, **Break Timer Value**, then indicate the length of the break, in minutes. You can set a break in increments up to one hour.

After you indicate the length of the break, choose **Tools**, **Break Timer**, **On** to start the timer. To turn the Break Timer off, press the Menu key on the remote or control panel.

Projecting transparencies

The Clear key clears the projected image, allowing you to project transparencies in the middle of your presentation.

You can clear to either a white or black background. Press the Clear key once quickly to clear to a white background. Press and hold it for at least two seconds to clear to a black background. Press Clear again once quickly, to return the projected image.

Note: *The panel area on the DP9100 is 6" by 8", which is slightly smaller than the panel area of most overhead projectors (typically 8.5" x 11"). You will need to adjust the focus to display transparencies.*

Using the Fit-To-View feature to zoom, reduce and pan images

The Fit-To-View feature lets you fit larger images on one screen. Use this key to compress 1280 x 1024 or 1152 x 900 images to fit the 1024 x 768 screen resolution, or to enlarge a 640 x 480 image to fit the screen. Press the Fit-To-View key a second time to return the image to its original size.

To pan an image that does not fit on the screen (images larger than 1024 x 768), press the arrow keys on the projector's control panel.

Note: *You can set the top and left pan limits by adjusting the Advanced, Horizontal (and Vertical) settings in the projector menus.*

Downloaded from Projector.com

Cyclops F/X

Your projector comes with Cyclops F/X—software effects that you can use to make your presentations more interesting and effective. For more information on Cyclops F/X, see *Chapter 4, Cyclops F/X*.

ADVANCED FEATURES

There are several advanced features of the DP9100 that make giving presentations even easier. For example, you can program two keys on the remote control, assigning them specific options. You can also save setting profiles, allowing two presenters who use the same projector to save their custom settings.

Programming the Cyclops remote control

You can program two keys on the Cyclops remote control, the Prog 1 and Prog 2 keys, to perform commonly used actions or to access a setting that you frequently adjust.

To program the Prog 1 and 2 keys, open the projector menus and choose **Preferences**. Choose the key you want to program (Prog 1 or Prog 2) and assign the feature or setting you want to access.

Note: *If you want to set assign one of the Cyclops F/X effects to one of the programmable keys, you must select* ***Host*** *in the Preferences menu.*

Saving a user profile

Different presenters have different styles. The DP9100 offers a way for two presenters to save their settings and recall them each time they give a presentation.

To save the current video settings as a profile, open the projector menus and choose **Advanced**, **User**. Choose **User A** or **User B**, adjusting each setting you want to save. When you exit the projector menus, your settings will be saved as the profile.

Note: *Sense line and front/rear settings are not saved as part of the profile. Sense line settings are automatically set when you turn on the monitor that is connected to the projector.*

When you want to use your profile, open the projector menus and choose **User**, **Advanced**, then select your profile (User A or User B). The settings take effect immediately.

Downloaded from Projector.com

Chapter 3

Menus and keys

PROJECTOR MENUS

The Main menu

Figure 3-1, The Main menu

MENU	WHAT IT CONTAINS
Tools	Settings for the LightBoard tool, Break Timer, and mouse tracking.
Cyclops	Commands for calibrating the Cyclops interactive pointer system and button selection.
Input Source	Settings for computer, video, S-Video, and MediaExpress input sources, and a display-only screen of current VSync, HSync, Lines, and Sense measurements.
Image	Settings for brightness, sync, tint, saturation, contrast, color, dot clock, and interlace assignment.
Audio	Settings for volume, mute, balance, bass, treble, fade, microphone volume, and mono/stereo mode.
Projector	Settings for front/rear projection and the lamp hours counter.
Preferences	Settings for colors, language, onscreen indicators, and Program key functionality. Also contains the settings for projecting in reverse video for DOS screens.
Advanced	Settings for custom profiles, horizontal and vertical image position, VCO gain, and sense lines.

Downloaded from Projector.com

The Tools menu

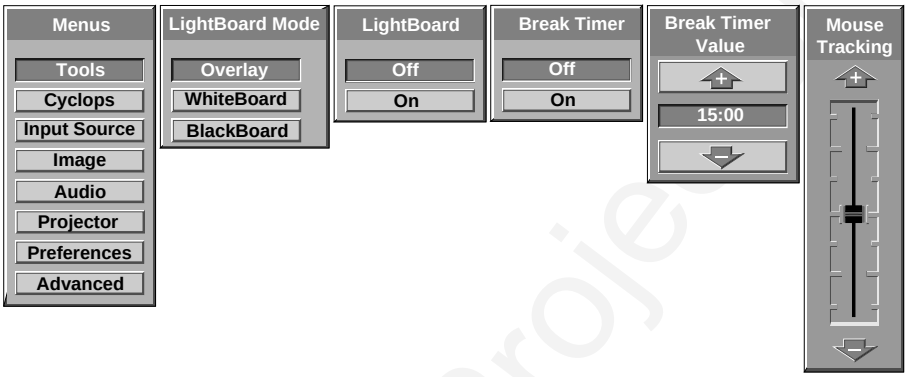

Figure 3-2, The Tools menu

USE THIS OPTION...	...TO DO THIS:
LightBoard Mode	Sets the background for LightBoard drawing: • Overlay (transparent) • WhiteBoard (white background) • BlackBoard (black background)
LightBoard	Turns the LightBoard tool on and off.
Break Timer	Starts the timer or turns it off.
Break Timer Value	Sets the break timer interval, from 1 - 60 minutes.
Mouse Tracking	Sets the speed of the mouse.

Downloaded from Projector.com

The Cyclops menu

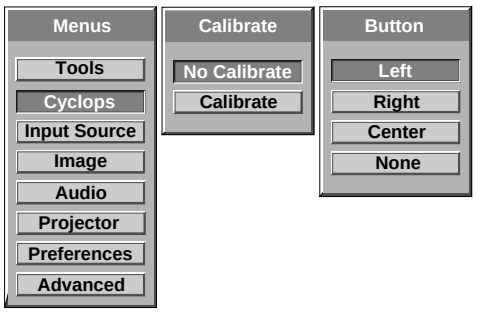

Figure 3-3, The Cyclops menu

USE THIS OPTION...	...TO DO THIS:
Calibrate	Starts the Cyclops calibration procedure.
Button	Sets the Cyclops wand or laser pointer to emulate a left, right, or center mouse button (or none).

Downloaded from Projector.com

The Input Source menu

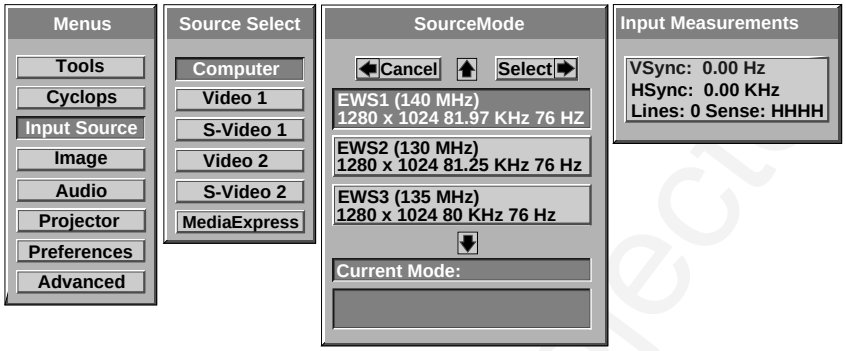

Figure 3-4, The Input source menu

USE THIS OPTION...	...TO DO THIS:
Source Select	Select the input source: • Computer • Video 1 • S-Video 1 • Video 2 • S-Video 2 • MediaExpress (optional)
Source Mode	Select from a list of video or computer standards: • NTSC • PAL • SECAM • Computer compatibility
Input Measurements	View projector readings for the selected input source: • VSync (vertical sync frequency) • HSync (horizontal sync frequency) • Lines (number of h-sync pulses per v-sync) • Sense (monitor input sense line levels)

Downloaded from Projector.com

The Image menu (computer or MediaExpress input source)

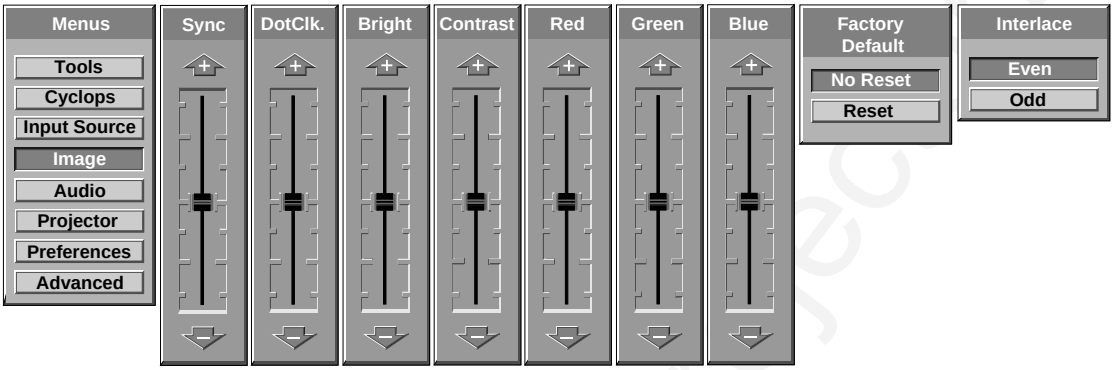

Figure 3-5, The Image menu

USE THIS OPTION...	...TO DO THIS:
***Sync**	Adjusts the sync setting.
***DotClk**	Adjusts the dot clock setting.
Bright	Adjusts the brightness of the image.
Contrast	Adjusts the RGB bias levels.
Red	Adjusts the red level.
Green	Adjusts the green level.
Blue	Adjusts the blue level.
***Factory Default**	Resets the source mode to the initial factory settings.
Interlace	Sets the interlace even/odd frame assignment: • Even sets frame 0 as even. • Odd sets frame 0 as odd.

* Not available in MediaExpress mode.

Downloaded from Projector.com

The Image menu (video or S-Video input source)

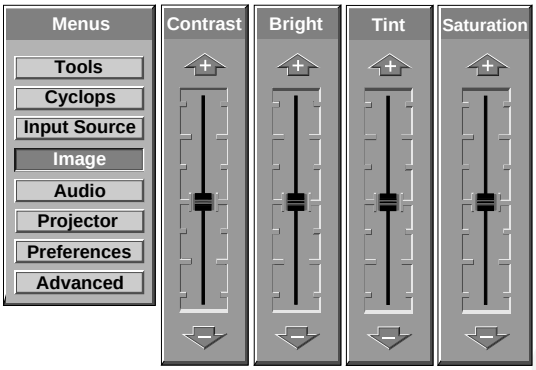

Figure 3-6, The Image menu

USE THIS OPTION...	...TO DO THIS:
Contrast	Adjusts the video contrast.
Bright	Adjusts the video brightness.
Tint	Adjusts the video tint.
Saturation	Adjusts the video color saturation.

Downloaded from Projector.com

The Audio menu

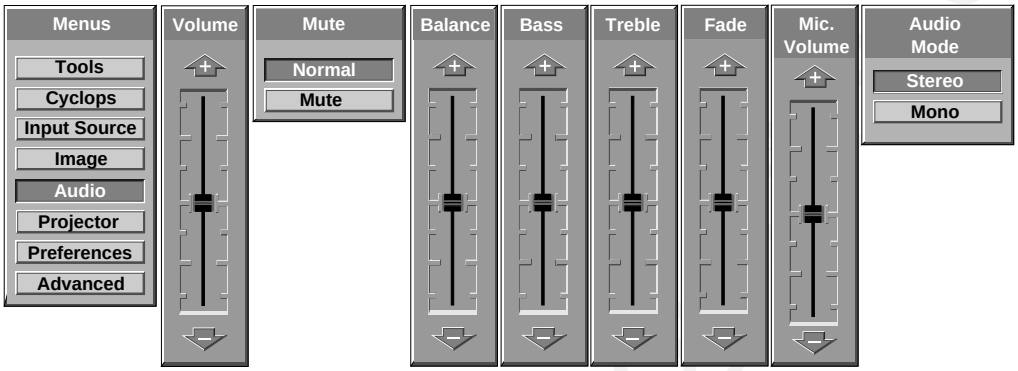

Figure 3-7, The Audio menu

USE THIS OPTION...	...TO DO THIS:
Volume	Adjusts the audio volume.
Mute	Mutes the audio or turns it back on.
Balance	Adjusts the left/right audio balance.
Bass	Adjusts the bass.
Treble	Adjusts the treble.
Fade	Adjusts front/rear audio balance.
Mic. Volume	Adjusts the volume of the microphone.
Audio Mode	Switches between Stereo and Mono mode.

Downloaded from Projectorcentral.com

The Projector menu

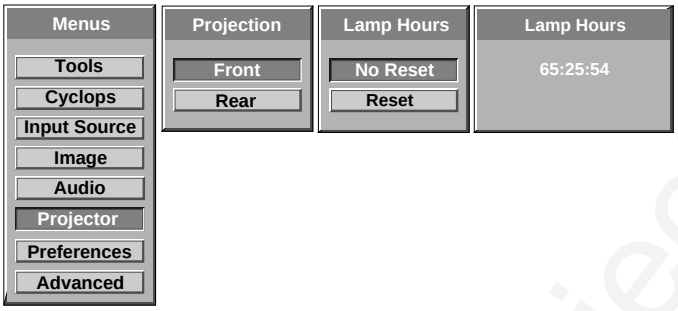

Figure 3-8, The Projector menu

USE THIS OPTION...	...TO DO THIS:
Projection	Switches between front and rear projection.
Lamp Hours	Resets the lamp hours counter. Use this option after you change the lamp.
Lamp Hours	Displays the number of hours elapsed on the lamp hours counter.

Downloaded from Projector.com

The Preferences menu

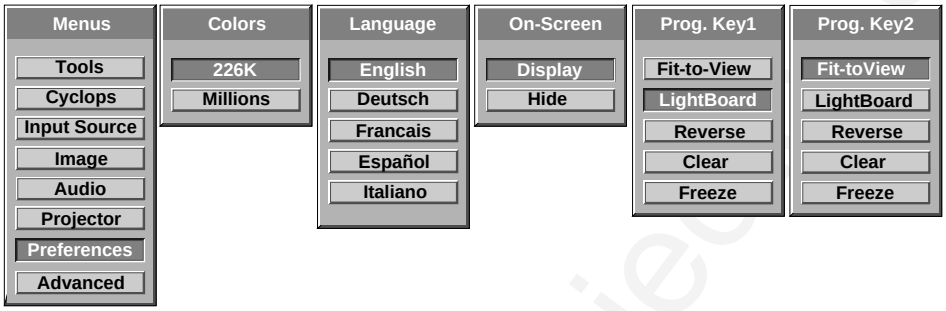

Figure 3-9, The Preferences menu

USE THIS OPTION...	...TO DO THIS:
Colors	Sets the number of colors to use.
Language	Sets the default language for the menus.
On-screen	Displays or hides the slide bars for sync, volume, contrast, tint, horizontal position, and vertical position.
Prog 1	Sets an operation for the Prog 1 key on the remote control. Choose from the following options (described elsewhere in this guide): • Fit-to-View • LightBoard • Reverse • Clear • Freeze • Colors • WhiteBoard • BlackBoard • Host • Title screen
Prog 2	Sets an operation for the Prog 2 key on the remote control (same choices as Prog 1 key).

Downloaded from Projector.com

The Advanced menu

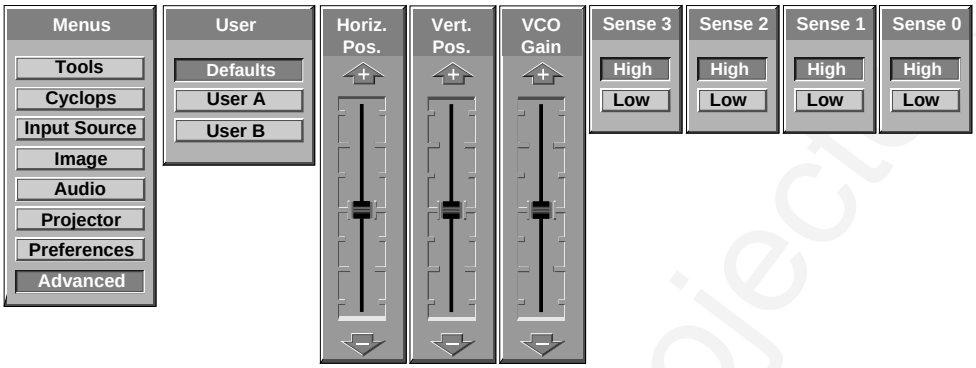

Figure 3-10, The Advanced menu

USE THIS OPTION...	...TO DO THIS:
User	Sets a user profile of projector settings: • Defaults • User A (user defined) • User B (user defined)
Hor. (Horizontal) Pos (Position)	Adjusts the horizontal position of the image on the screen.
Vert. (Vertical) Pos (Position)	Adjust the vertical position of the image on the screen.
VCO gain	Sets the VCO gain parameter of the PLL.
Sense 3, 2, 1, and 0	Set the level of the four sense pins: • High does not drive this pin. • Low drives the pin low. See *Appendix C, Sense Lines* for more information.

Downloaded from Projector.com

Chapter 4

Cyclops F/X

Your projector comes with Cyclops F/X — software effects that you can use to make your presentations more interesting and effective. For example, you can use the Spotlight to call attention to specific areas on the image, use the Zoom or Magnify effects to focus on important information in the image, or use See-it/Show-it to preview images on your computer without distracting your audience.

You can use Cyclops F/X with either the remote that came with your projector or the optional Cyclops interactive pointer system, or both at the same time.

Note: *Cyclops F/X is not available for UNIX systems.*

Note: *You cannot use Cyclops F/X with the MediaExpress system.*

To use Cyclops F/X, follow these steps (details are covered throughout this chapter):

1. Use the serial cable appropriate for your system (PCs: C936-6 or Macs: C470-6) to connect the serial port on your computer to the CYCLOPS port on the projector.

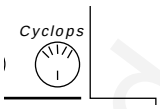

Figure 4-1, Cyclops port on the projector

2. Install the Cyclops F/X software.
3. Start Cyclops F/X, customize the effects, and assign them to specific keys on the keyboard or buttons on the remote control.
4. Minimize the Cyclops F/X main screen.

Then, just press the assigned key or button during your presentation to start an effect.

This chapter is designed to give you a brief introduction to the Cyclops F/X software.

Note: *Updates to the Cyclops F/X software are available for download from the World Wide Web at http://www.prxm.com.*

Downloaded from Projector.com

INSTALLING CYCLOPS F/X

Follow these steps to install the Cyclops F/X software:

1. Insert the disk labeled Proxima Cyclops F/X into your computer's floppy drive.
2. Do one of the following:
   - In Windows 95, choose **Start**, **Run**, then type a:\setup.exe (or the drive letter for your floppy drive).
   - In Windows 3.x, choose **File**, **Run**, then type a:\setup.exe (or the drive letter for your floppy drive).
   - On a Macintosh, double-click the disk icon, then double-click the **Cyclops F/X Installer** icon in the disk window. Drag the Cyclops F/X icon onto the hard disk icon.
3. Follow the instructions that appear on your screen.

STARTING CYCLOPS F/X

Once you're finished with the installation, do one of the following:

- In Windows 3.x or Windows 95, double-click the **Cyclops F/X** icon to start the program.
- For Macintosh users, the software will automatically load each time you start your computer.

Windows users

The first time you start the software, Cyclops F/X displays a Projector Setup Tutorial (Wizard). Follow the instructions that appear on your screen. When you have finished configuring your system, restart Windows.

Downloaded from Projector.com

The main screen of the F/X program appears:

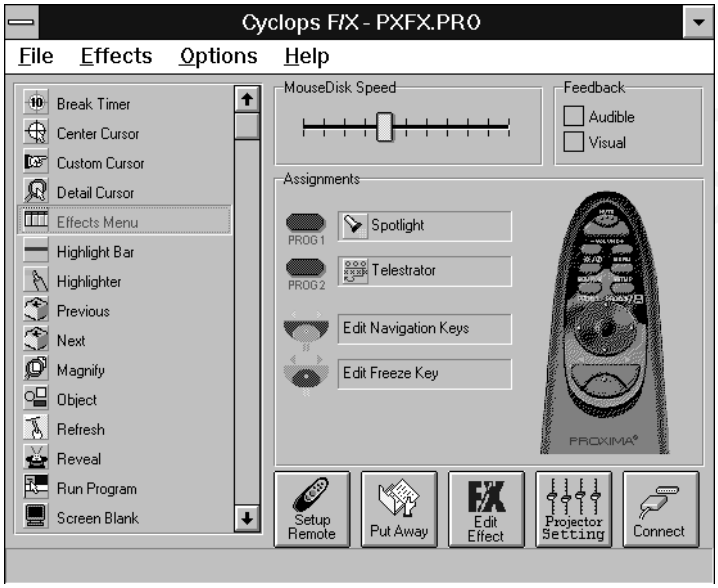

Figure 4-2, Cyclops F/X special effects

On the left side of this window is a list of the special effects. The Assignments area in the middle of the window provides options that allow you to customize your remote and software.

Note: *If you open a menu, or if you're using the LightBoard tool, Cyclops F/X will be suspended.*

ASSIGNMENTS AREA

The Assignments area displays the custom remote keys and their current assignments. To modify the custom remote keys:

1. Highlight the effect you want to assign.
2. Double-click the box next to the custom remote key in the Assignments area.

Downloaded from

The Assignments area also contains five buttons:

BUTTON	FUNCTION
Setup Remote	Lets you switch the assignments display between the included Cyclops remote control and the optional Cyclops wand or laser pointer.
Put Away	Minimizes the F/X screen.
Edit Effect	Allows you to assign a shortcut key to the effect. You can also use this option to customize an effect.
Projector Setting	Allows you to adjust image, audio, and general settings on your projector.
Connect	Allows you to choose the COM port to which you will connect your projector.

In addition, the Assignments area allows you to control the MouseDisk speed on your remote, and gives you checkboxes to turn on audible and visual feedback.

CUSTOMIZING EFFECTS

Most effects have options that you can tailor to both the presentation and your own presentation style.

For example, you can customize the Spotlight effect to specify the shape and size of the spotlight. You can also change the name of each effect (for example, you can change the name from “Spotlight” to “Headlight”).

You can assign each effect to a key on the keyboard or a button on the remote control. The key or button you choose starts that effect.

To customize an effect:

1. Right-click the name of the effect and choose **Edit** from the menu. You can also select the desired effect and click the Edit Effect button to make your changes.
2. Adjust the settings in the appropriate dialog box and click **OK**.
3. When you’re finished customizing the effect, choose **File** and **Save** to save your settings.
4. Click the control box in the upper right corner to minimize the Cyclops F/X main screen.

Downloaded from Projector.com

Note: *To access effects that are assigned to the Prog 1 and Prog 2 keys, assign the settings for those keys (in the projector's Preferences menu) to Host.*

USING THE CYCLOPS INTERACTIVE POINTER SYSTEM

You can use the Cyclops interactive pointer system with Cyclops F/X. To set up the software, click Setup Remote in the Assignments area of the mains screen. Choose Cyclops Wand or Laser Pointer. The following screen appears:

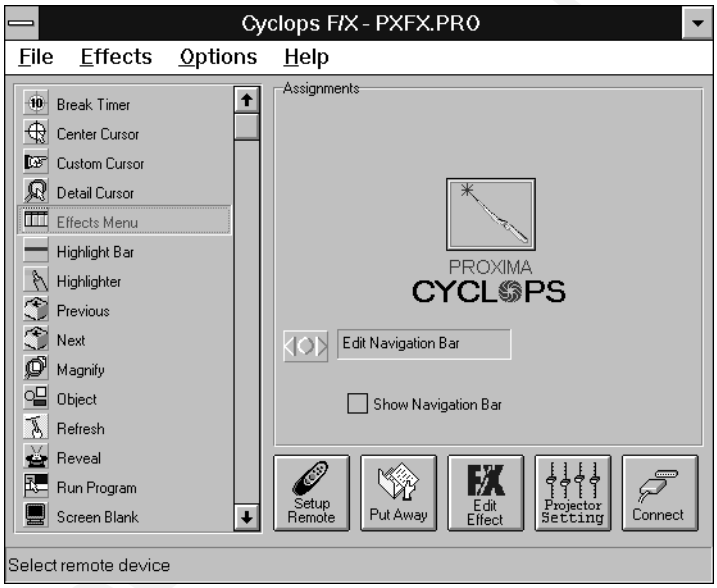

Figure 4-3, Cyclops interactive pointer screen

Click the Show Navigation Bar checkbox to enable the navigation bar. This will provide you with a quick way to scroll through your slide show with the Cyclops wand or laser pointer.

Downloaded from projectorreviews.com

Click on the Edit Navigation Bar button. The following screen appears:

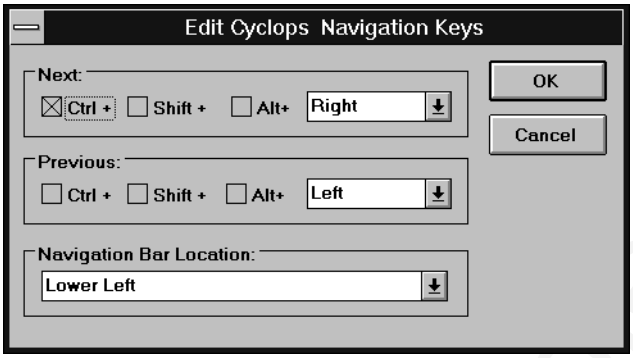

Figure 4-4, Edit Cyclops Navigation screen

Use this screen to assign different options to the navigation bar. To assign a new function to the navigation bar, click the Next or Previous areas and assign a function using the list boxes to the right.

You can also use this screen to define where the navigation bar will appear on your display. The default is Lower Left.

Downloaded from Projector.com

SEE-IT/SHOW-IT

See-it/Show-it is a feature of Cyclops F/X that previews the next slide in your presentation on your computer monitor—without switching from the slide your audience sees. The See-it/Show-it feature displays the image, along with a timer that counts down on your computer monitor until See-it/Show-it displays the next slide. You can use See-it/Show-it to preview slides so that you can interact with your audience, while preparing for the message on the next slide.

To use See-it/Show-it:

1 Click **Edit Navigation Keys** in the Assignments area of the Cyclops F/X main screen. The following screen appears:

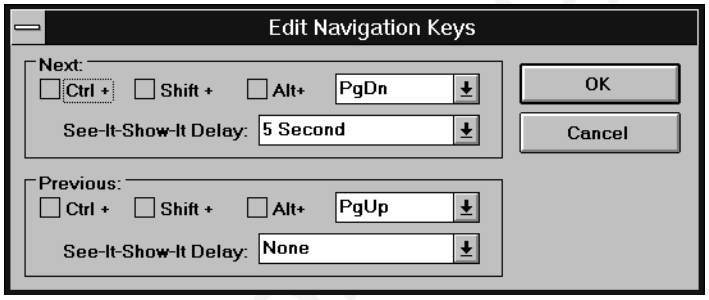

Figure 4-5, Edit Navigation Keys screen

2 Select a countdown time for the Forward or Reverse keys, or both. When you select a countdown time, See-it/Show-it is automatically enabled.

3 To disable See-it/Show-it, select **None** from the Forward and Reverse key list boxes.

To switch to See-it/Show-it, press the Forward or Reverse key once quickly. To end See-it/Show-it, press the Forward or Reverse key a second time. The counter disappears and the next slide immediately displays.

Downloaded from projector.com

FREEZE

The Freeze option freezes the image on your projector so you can use your remote to control your computer. This might be handy when you want to perform functions on your computer without distracting your audience from your presentation. To edit the Freeze key settings, click the Edit Freeze Key option in the Assignments area. The following screen appears:

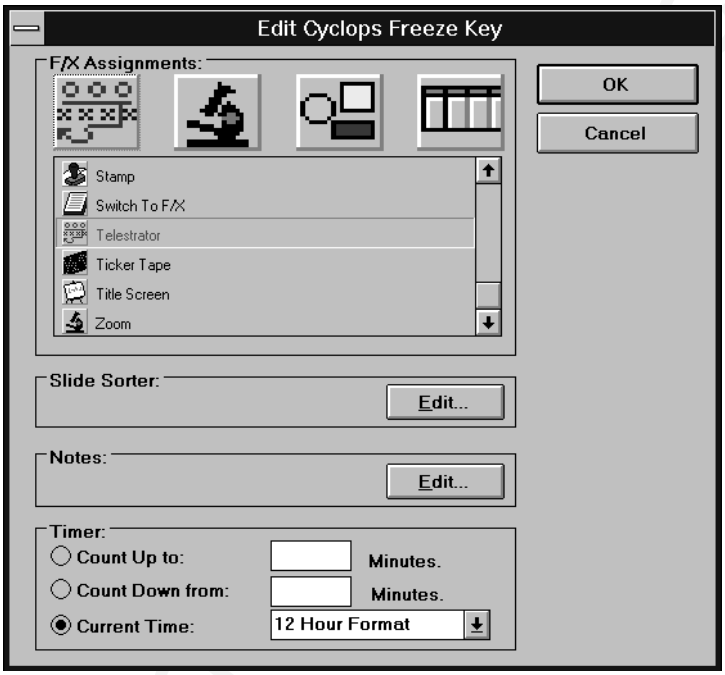

Figure 4-6, Edit Freeze Key screen

To use Freeze:

1. Press **Pause** on your Cyclops remote.
2. Use any of the remote keys to control your computer.
3. Press **Pause** again when you're ready to return to your presentation.

Once you freeze your screen, all of the other keys on your remote are available to control your computer. This means you can edit your current presentation, display slides from another presentation, or even open another application — all without distracting your audience.

Note: *If you adjust the projector settings from your computer while you're in Freeze mode, your changes will not display until you exit .*

Downloaded from projectorcentral.com

STARTING AN EFFECT

Once you've customized an effect, you're ready to use it.

1. Before the presentation, start Cyclops F/X, then minimize the main screen.
2. During your presentation, press the key or button that you assigned to each effect to start the desired effect.

THE PRESENTATION EFFECTS

The following are the Presentation Effects. To end any of the effects, press the Esc key on your keyboard or the key on remote that you assigned for that effect.

Break Timer is a digital timer that counts down from a duration you set. Once you start the timer, click the MouseDisk once to lengthen the duration.

You can also use Break Timer to play a sound or select a background color or picture. If your computer is equipped with a sound card, you can select a .WAV file and play it continuously while the timer is running, or use it as an alarm that sounds when the timer expires.

To set a transparent background, uncheck **Color** and **Picture**. To display a picture, check **Picture**, click **File**, then select the desired .BMP file.

Center Cursor centers the mouse pointer on the screen. This helps prevent "losing" the cursor.

Custom Cursor changes the appearance of the mouse pointer to one of 30 images. Only the standard arrow pointer changes. The other standard icons (such as the hourglass) are not affected.

Detail Cursor magnifies the area around the pointer in a small rectangle.

Effects Menu displays a list of effects. Use this feature to start effects that you haven't assigned to a button or key. To start an effect, double-click its name. Press Esc on the keyboard to close the list without starting an effect.

Highlight Bar draws a horizontal bar across the screen. Move the bar up or down to draw attention to different areas on the screen. You can also change the color and width of the bar.

Highlighter works like a highlighter pen on your computer screen, by overlaying a semi-transparent color on your screen. You can change the color and width of the "pen."

Downloaded from Projector.com

Magnify enlarges a rectangular area around the mouse pointer. You can choose from three levels of magnification (200 percent, 400 percent, or 800 percent).

Note: *To enlarge the entire screen, use the Zoom effect.*

Next/Previous advances to the next or previous slide.

Object allows you to draw rectangles, squares, ellipses, and circles. You can change the color and width of each shape.

Refresh repaints the projected image. Use this feature to erase "remnants" of Stamp and Telestrator effects.

Reveal hides the image, then lets you incrementally reveal more and more of the image. You can specify a color for the hidden area, a horizontal or vertical effect, and the size of the Reveal window.

Run Program starts a program that you choose.

Screen Blank blanks the screen to a color that you choose.

Sound plays a .WAV file when you press a button. You can play the sound repeatedly or just once.

Note: *You must have a sound card to use this effect.*

Spotlight dims all of the image except for the area around the mouse pointer. You specify the shape and size of the spotlight (circular, square, or bar). Once you've started Spotlight, press the MouseDisk to change its size. Another setting makes the Spotlight visible against a black background.

Stamp allows you to choose from 15 different bitmaps to "stamp," or paste, over the projected image. You can also choose to play a sound each time you stamp.

Switch to F/X switches to the Cyclops F/X main screen.

Telestrator turns the mouse into a freehand drawing tool. You can customize the color and width of the line and "constrain" the drawing to only horizontal or vertical lines.

Ticker Tape displays a scrolling text message across the image. Just specify the text of that you want to appear, the typeface, and the point size. You can play a sound file each time the message runs across the image, and customize the background color and picture.

Downloaded from Projector.com

Title Screen projects an image from a .BMP file. You can use this effect to show a predefined image with transition effects during a presentation. You can also play an associated sound. Just specify which file to play and indicate whether to play it when the image appears or continuously.

Zoom enlarges the entire image to 200%,400%, or 800% of its original size. You choose whether to show the mouse pointer during a Zoom and indicate the level of magnification. If you check the Show Cursor During Zoom checkbox, left-click to manually cancel the zoom. If you uncheck the Show Cursor During Zoom checkbox, left-click to change the zoom factor.

Note: *Most effects have an option that lets you rename the command itself.*

MENU COMMANDS

File menu

The File menu offers the following commands for working with profiles of effects.

MENU ITEM	FUNCTION
Reset to defaults	Resets the F/X options to the factory defaults.
Open	Opens a previously saved profile of settings.
Save	Saves recent changes to the current profile.
Save As	Saves the profile settings under a name and location you specify.
Exit	Quits the F/X program.

Effects menu

The Effects menu lets you change the items in the effects list.

MENU ITEM	FUNCTION
Edit	Allows you to edit F/X options.
Test	Tests the current effect.
Add	Allows you to add an effect.
Duplicate	Allows you to copy an effect.
Delete	Allows you to delete an effect.

Downloaded from Projector.com

Options menu

The Options menu offers commands that allow you to set up assignments on the remote, wand, or laser pointer, change the look and feel of the cursor, and change the COM port settings.

MENU ITEM	FUNCTION
Setup Remote	Allows you to display the assignments area for the Cyclops remote control or the optional Cyclops wand or laser pointer.
Cursor Options	Changes the look and feel of the cursor. Also includes an option that allows you to apply one of the Cyclops F/X custom cursor options to Windows.
Connect	Allows you to edit the COM port settings for your computer.

Downloaded from Projector.com

Chapter 5

Maintenance

Periodic maintenance will keep your DP9100 in top working condition.

CLEANING THE LENS AND MIRROR

To clean the projection lens and mirror:

1. Take a piece of lens tissue and form it into a loose swab. Wet it with lens cleaning fluid or denatured alcohol, and gently wipe it over the surface of the lens or mirror.
2. Take another clean piece of lens tissue and repeat the process, wiping it over the lens or mirror in the opposite direction.

Repeat this process until no smudges or particles can be seen. DO NOT LOOK DIRECTLY INTO THE LENS WHEN THE LAMP IS ON!

Caution: *Do not use acetone to clean the lens. It may remove paint from areas around the lens or mirror and leave a residue on the glass.*

CLEANING THE PROJECTION WINDOW

The projection window is the surface through which the LCD image is projected. To maintain a clear, sharp image, you should clean the projection window from time to time.

To clean the surface of the projection window:

1. Use a can of compressed air to blow dust off of the LCD panel inside the projector. Point the can into the opening in the top center of the right side of the projector (see Figure 5-1).

Downloaded from projector.com

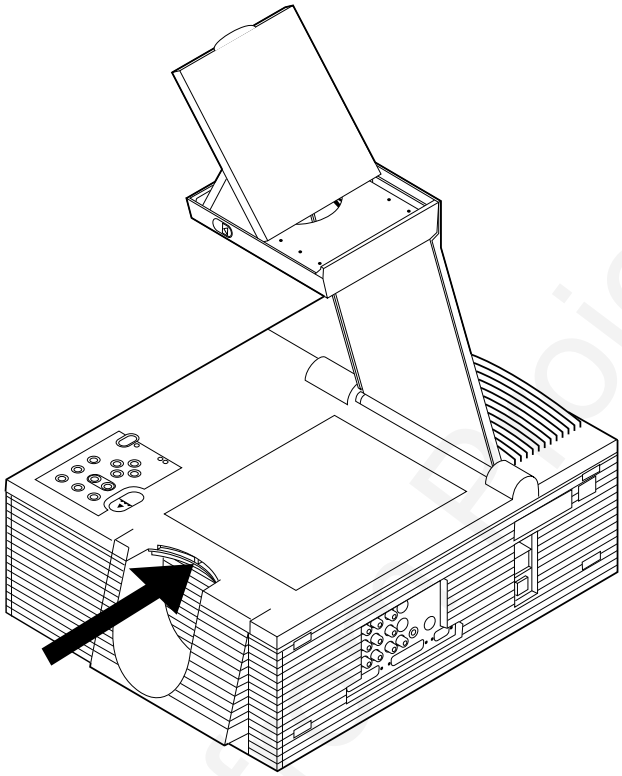

Figure 5-1, Blowing air into the projector

2 Take a piece of lens tissue and form it into a loose swab. Wet it with a solution of approximately ten percent Isopropyl alcohol and water, and gently wipe it over the surface of the projection window.

3 Take another clean piece of lens tissue and repeat the process, wiping it over the projection window in the opposite direction.

4 Repeat if necessary.

Caution: *Do NOT use lens cleaning fluid to clean the projection window. It may damage the to the surface.*

Downloaded from projector.com

REPLACING THE LAMP

For best performance, you should replace the lamp after 700 hours of operation.

Note: *Do not touch the lamp with your bare hands. Use gloves or a soft cloth and handle it using the metal ends only.*

Removing the old lamp

1. Leave the projector running with the lamp off for at least five minutes before you change the lamp. This allows the fan to cool the lamp chamber.
2. After the lamp has cooled sufficiently, turn off the projector and unplug the power cord. (As a safety feature, the lamp chamber can't be opened until the power cord has been removed.)
3. Slide the AC lock button in the direction of the arrow. This button will not move unless the power cord has been disconnected from the projector.
4. While sliding the AC lock button, remove the left side cover by sliding it about 1/4 of an inch to the left. When the cover releases, pull it straight off (see Figure 5-2).

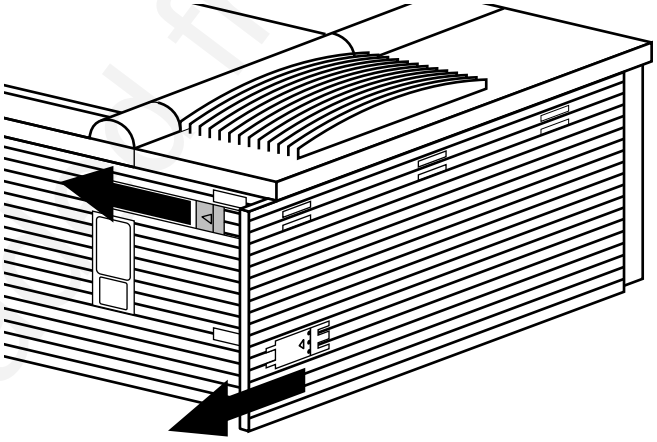

Figure 5-2, Sliding the rear panel off of the projector

Downloaded from Projector.com

5 Locate the door to the lamp chamber on the right side of the left panel. It has one slotted captive screw. With a screwdriver or coin, loosen the screw, then open the lamp chamber door (see Figure 5-3).

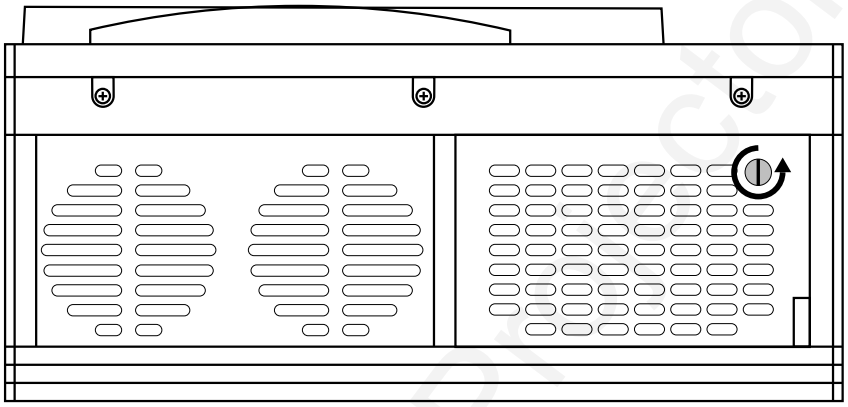

Figure 5-3, Opening the lamp chamber door

6 Locate the thumbscrew on the right side of the lamp and unscrew it. When the thumbscrew is loose enough, gently pull the lamp from the right socket and then slide it out from the left.

Installing the new lamp

Caution! *Make sure to wear gloves or use a soft cloth to handle the new lamp. Never touch the lamp with your bare hands, as this can significantly shorten the life of the lamp. If you do touch a portion of the lamp with your bare hands, wipe it off with a soft cloth moistened with denatured alcohol.*

To install a new lamp:

1 Remove the lamp from the package.

2 The lamp has thumbscrews on both ends. Remove the thumbscrew from the end of the lamp that has no printing. Discard the thumbscrew.

Downloaded from Projector.com

3 Slide the end of the lamp without the thumbscrew into the slot on the left side of the lamp chamber (see the Figure below).

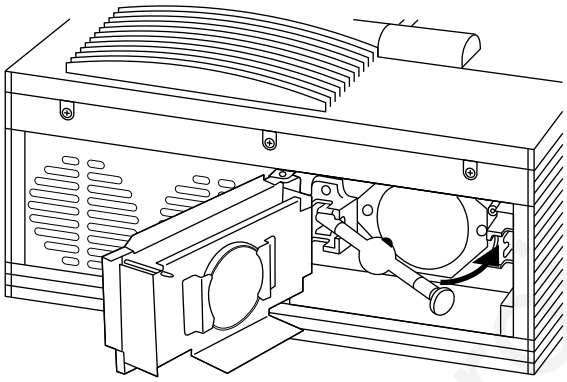

Figure 5-4, Sliding the lamp into place

4 Slide the end of the lamp with the thumbscrew into place, with the glass pinch-off on the lamp pointing up, and tighten the thumbscrew. Make sure to tighten the thumbscrew as much as possible. Pull the lamp to make sure that it's securely seated.

5 Close the lamp chamber door and tighten the captive screw.

CLEANING/CHANGING AIR FILTERS

To make sure that your DP9100 operates safely and efficiently, you should change or replace the filters after every 250 hours of operation. It is best to change or clean all of the projector's filters at once. To clean the filters, wash them in a solution of warm, soapy water.

There are three air filters in your DP9100.

Accessing the top filter

To access the top filter:

1 Remove the left side door, as described in the previous section.

2 Unscrew the three screws located at the top of the left side area (see Figure 5-5).

Downloaded from Projector.com

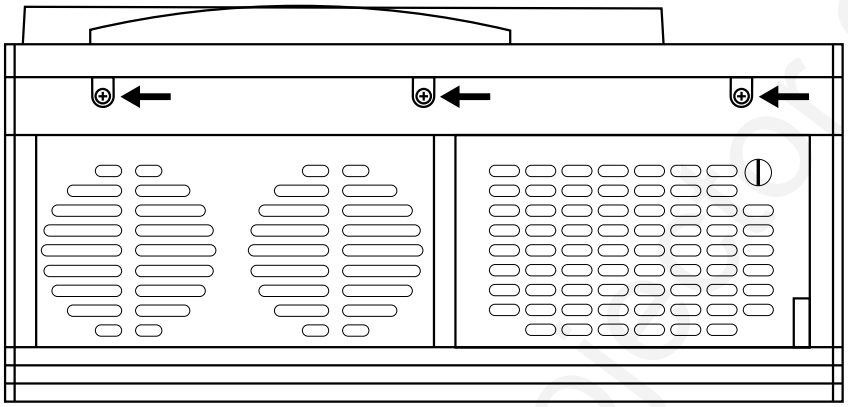

Figure 5-5, The three left-top retaining screws

3 Unsnap the top left cover by lifting it up and pulling it out (see Figure 5-6).

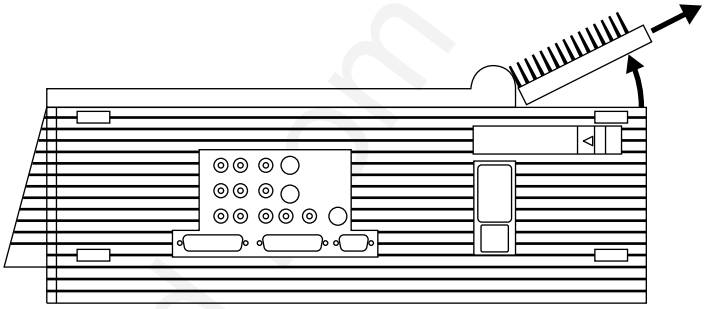

Figure 5-6, Lifting the top left cover out

The filter is located on the inside of the top left cover (see Figure 5-7).

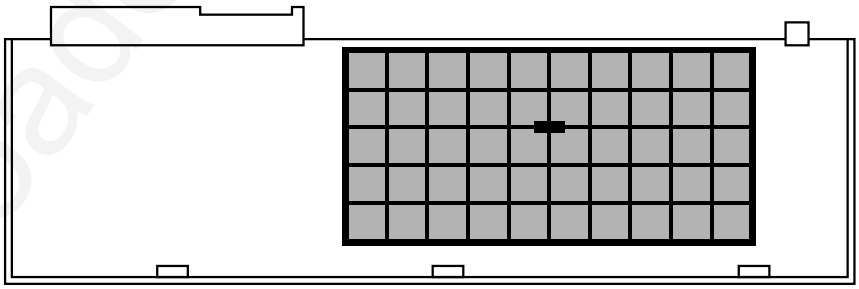

Figure 5-7, The top cover filter

Downloaded from ProjectorRepair.com

4 There is a plastic grill covering the filter. Pull on the handle in the center of the grill to access the filter.

To replace the top cover, reverse steps one through three, taking care to align the cover before snapping it into place.

Accessing the right filters

Before you can access the right filters, you must remove the left side door and top left cover. See steps 1 through 3 above for more information.

To access the right filters:

1 With the projection arm down and locked, turn the projector on its side, with the handle facing up.

2 Locate the screws on the bottom side of the right panel. Loosen the three screws.

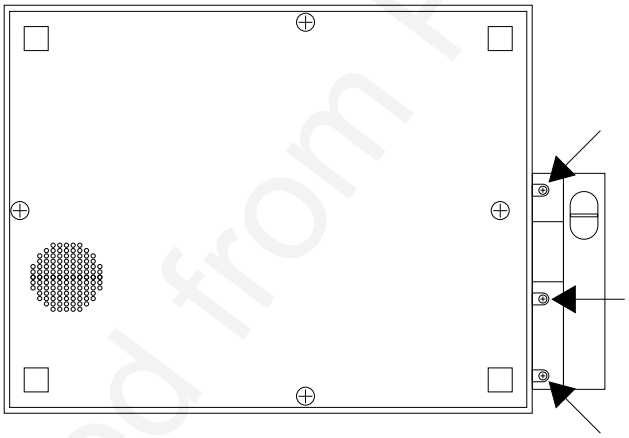

Figure 5-8, The three bottom screws

3 Turn the projector back to its base and raise the projection arm.

Downloaded from Projector.com

4 Locate the screws holding the main top cover in place (see Figure 5-9). Remove the three screws and lift up on the screw mountings until the cover is loose. Gently pull the cover up and to the left of the projector until it releases.

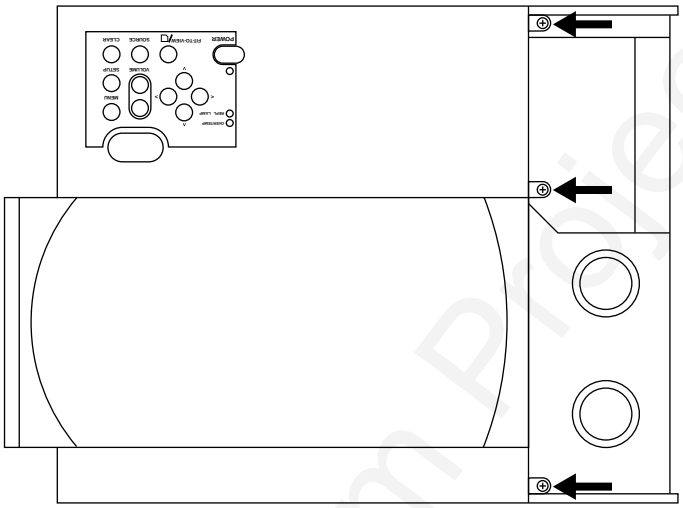

Figure 5-9, The three top cover screws

5 While still holding the cover, remove the ribbon cable on the underside of the control panel. Place the cover on a soft cloth.

Caution! *Never touch the LCD panel located underneath the top-cover projection lens. Use caution when changing the filters.*

Downloaded from Projector.com

6 Locate the three screws at the top of the right side panel. Remove the screws and unsnap the panel, from the rear first.

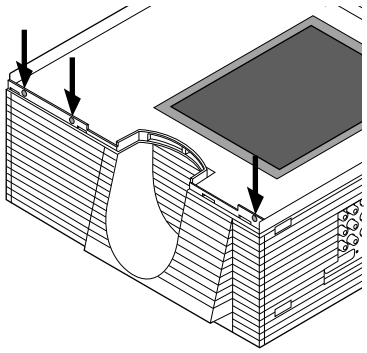

Figure 5-10, The screws at the top of the right side panel

7 The filters are now exposed (see Figure 5-11). Remove the retaining screw to access the rear filter. Pull the front filter out.

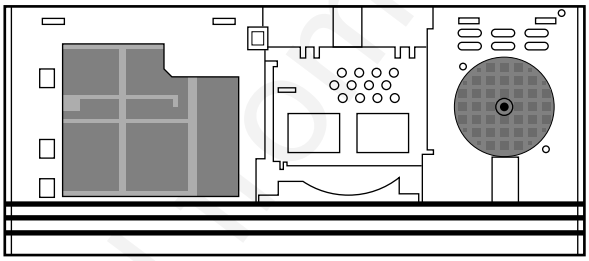

Figure 5-11, The two right side filters

To replace the covers, reverse steps one through five, taking care to align the top and side covers. Make sure to reattach the ribbon cable *before* you replace the top cover. The ribbon cable is keyed, so it will only reattach on one side. Also, make sure that the arm release lever is in the release position (fully to the left) before you replace the top cover.

Downloaded from Projector.com

REPLACING THE BATTERIES IN THE REMOTE CONTROL

1 Locate the battery compartment on the end of the remote control. Press down while you slide the cover off of the compartment.

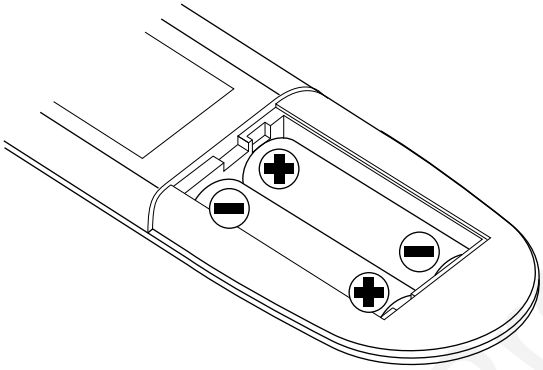

Figure 5-12, Installing batteries in the remote control

2 Remove the old batteries and replace them with new ones. Make sure you align the batteries in the proper direction.

3 Slide the cover back onto the battery compartment, snapping it into place.

TEMPERATURE EXTREMES

Your projector should not be stored in excess of 140˚ F (50˚ C). The maximum operating temperature is 80˚ F (27˚ C).

If the projector has been exposed to extremely cold temperatures, you should allow it to warm up to room temperature before you begin your presentation.

In general, the recommended maximum operating temperature drops 1˚ C for every 1,000 feet (305 meters) above sea level.

Downloaded from Projector.com

Chapter 6

Troubleshooting

This chapter provides answers to some commonly asked questions about the Desktop Projector 9100.

TROUBLESHOOTING CHART

Please refer to this troubleshooting chart and the following adjustment recommendations before calling for assistance.

PROBLEM	LIKELY CAUSE	POSSIBLE SOLUTION(S)
No computer image projected.	1. Loose cable.	1. Check and secure cable connections.
	2. No power to computer.	2. Turn on computer.
	3. Incompatible video system.	3. If possible, check computer with another monitor.
	4. No power to projector.	4. Power switch; AC cord plugged in (both ends); outlet on.
	5. External video port not activated.	5. Activate the external video port on your notebook. Cycle the power on your notebook with your projector connected and turned on.
No image on computer screen.	1. Loose cable. 2. Wrong video cable. 3. BNC cable not connected correctly.	1. Connect cable. 2. Use correct video cable. 3. Make sure cable is correctly attached at both ends.
Monochrome on color monitor.	Computer was turned on before projector.	1. Turn projector on. 2. Restart computer.
Streaks on monitor.	Video cable plugged into computer is upside down.	Check and reset cable connections.
Faint screen.	Low contrast.	Adjust CONTRAST.
Jittery, fuzzy letters.	Out of sync.	Adjust SYNC setting.

Downloaded from Projector.com

PROBLEM	LIKELY CAUSE	POSSIBLE SOLUTION(S)
Image off-center.	Position controls (arrow keys) or the Hpos/Vpos controls in the menus.	Adjust position controls. If image will not center, check for compatibility problems.
Cannot get entire image on screen; scrambled image.	1. The default resolution for all images larger than 1024 x 768 is 1024 x 768. 2. Compatibility problem.	1. Press the Fit-to-View key to see the entire image, or use the arrow keys to pan the image. 2. Make sure your system is compatible with the standards listed in Appendix A.
Black border appears around 800 x 600 images.	The full 800 x 600 image is displayed in 1024 x 768 mode. The black area is not used.	The projector is functioning normally. Disregard.
Image appears to have lines "swapped."	Incorrect interlace signal selected.	Select the opposite interlace signal (even/odd).
One or more colors "shimmer" on-screen.	SYNC, BRIGHTNESS, or CONTRAST is out of adjustment.	Adjust SYNC, BRIGHTNESS, or CONTRAST settings.
No video image projected.	1. Video source(s). 2. Loose/improper cabling.	1. Check video source(s) (composite or S-Video) for power and proper operation. 2. Secure cabling between video source(s) and projector.
Colors weak in video (NTSC/PAL/SECAM) mode.	1. Video source (s). 2. CONTRAST setting may be too low.	1. Check for faulty video source, bad connection, or frayed cable. 2. Adjust CONTRAST level.
Getting excess white or washout in video mode.	Video signal level too high.	Adjust CONTRAST level.
Black and white image from color SECAM input.	Ambiguity in video signal.	Activate Input Source menu and select SECAM as the video source mode.

Downloaded from Projector.com

PROBLEM	LIKELY CAUSE	POSSIBLE SOLUTION(S)
Remote control does not work.	Batteries upside-down or old.	Check battery placement or replace with new batteries.
Tiny dim or colored points of light.	This is a normal LCD effect.	None.
Overtemp light is illuminated.	1. Airflow is blocked. 2. Filters are clogged. 3. Fan is malfuntioning.	1. Ensure that the shorter sides are unobstructed. Cycle the power and try again. 2. Clean or replace filters. 3. Projector needs service.
Rainbow image.	Lamp pinch-off not pointing up.	1. Adjust lamp position to point pinch-off straight up. 2. Ensure thumbscrew is very tight.
Discolored image.	Lamp is not seated properly.	1. Adjust lamp to ensure it is firmly seated in the clamps. 2. Ensure thumbscrew is very tight.

DP9100 PARAMETER ADJUSTMENTS

If the auto-selected computer source parameters are incorrect for your application, or the computer system you are using is not one of the many stored in the DP9100 (refer to the compatibility list beginning on page 6-9), it may be possible to select a closer source mode.

1 Open the DP9100's Input Source Menu and record the H Sync and V Sync values in the Input Measurements window for the incoming video signal.

Input Measurements
V Sync: 72.00 Hz
H Sync: 78.00 KHz
Lines: 1057 Sense: HLHL

Figure 6-1, Input measurement window

2 If possible, consult your computer's technical documentation for your system's Video Data Rate (Dot Clock) specifications.

Downloaded from Projector.com

3 After you have determined your video specifications, find the closest computer parameter entry in the compatibility list. Next, open the DP9100's Source Mode menu and scroll up or down through selections to find the closest source mode. Use the right arrow key to load the mode of choice.

Further parameter adjustments may be required to correct image problems for the "best" input source selection. A basic explanation of the adjustment functions follows.

Note: *Parameter modifications are saved each time you close the menus or turn off the power.*

Adjusting Contrast and Brightness

Adjust the Contrast so that the colors (particularly the gray shades) are right for the projected image. Buttons should look three-dimensional, as they do on your monitor. Adjust the Brightness to make the image clear.

Adjusting Sync

Adjust the Sync control to shift the dot clock's phase to match the phase of incoming video signal. An incorrect Sync setting causes "sparkles" and horizontal streaks randomly across the screen.

Adjusting the Dot Clock

The Dot Clock control adjusts the projector's dot clock frequency to match the incoming video signal's frequency. An incorrect dot clock adjustment causes faint, uniformly spaced vertical lines of video distortion/shading.

Adjust the Dot Clock control slowly in the direction that causes the lines/bands of shading to get wider and fewer in number. There will be no bands of distortion/shading when correctly adjusted.

Adjusting the Horizontal Position

The Hor. Pos (Horizontal Position) control adjusts the amount of blanking before each horizontal line. Incorrect horizontal position adjustment can cause either side of the projected image to extend beyond the viewing area, end of line wrap around, or a half-normal display size.

Downloaded from Projector.com

Adjusting the Vertical Position

The Vert. Pos (Vertical Position) control adjusts the amount of blanking before each video frame. Incorrect vertical position adjustment can cause the projected image to extend above or below the viewing area, video frame overlap (lines from the bottom of one frame superimposed on the top of the next frame, or a horizontal or vertical double image).

Adjusting the VCO Gain

The Voltage Control Oscillator's (VCO) gain affects how well the Dot Clock locks to the incoming horizontal sync signal. Incorrect VCO Gain is indicated by lines shooting through the display or severely compressed or shifted displays.

ADJUSTING YOUR DISPLAY

Horizontal Double Image

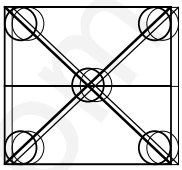

Figure 6-2, Adjusting the horizontal position

Adjusting the Horiz. Pos control will usually correct this problem. Use the arrow keys on the control panel, the Setup key, or the following procedure:

1. Press the Menu key. The Main menu displays.
2. Select **Advanced**.
3. Select **Vert. Pos** (Vertical Position).
4. Press the down arrow key until the image is properly aligned.

Note: *There are separate Vertical Position values for Normal and Fit-to-View modes. Adjustments in one mode are not made in the other.*

Downloaded from Projector.com

Half-Normal Height Display

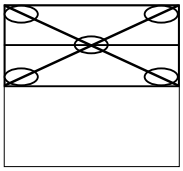

Figure 6-3, Adjusting the half-normal height display

Use the arrow keys, the Setup key on the control panel, or use the following procedure to adjust the half-normal height display:

1. Press the Menu key. The Main menu displays.
2. Select **Advanced** from the Main menu.
3. Select the **Hor. Pos** (Horizontal Position) slide bar.
4. Press the down arrow key until the is properly aligned. (If this adjustment does not correct the problem, reset the Hor. Pos control.)

Note: *There are separate Hor. Pos and Vert. Pos values for Normal and Fit-to-View Modes. Adjustments in one mode are not made in the other.*

5. Press the right arrow key to select the Vert. Pos (Vertical Position) slide bar.
6. Press the down arrow key until the image displays properly. (If this adjustment does not correct the problem, reset the Hor. Pos control to the default.)

   If neither parameter corrects the problem, you must find the correct Dot Clock value to prevent image distortion. Make changes to this parameter SLOWLY to avoid skipping over the desired value. Considerable trial and error may be required.
7. Select **Image** on the Main Menu.
8. Select the Dot Clock slide bar with the right arrow.
9. Move the slide bar up or down until the image displays properly.

If none of these adjustments corrects the problem, try a different SOURCE MODE selection. Make sure the selection has the correct resolution and the closest V-sync and H-sync values.

Downloaded from Projector.com

Vertical Double Image

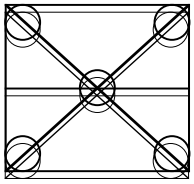

Figure 6-4, Adjusting the vertical position

Use the Setup key or the following procedure to adjust the Vert. Pos control:

1. Open the Main menu.
2. Select **Advanced**.
3. Select Vert. Pos (Vertical Position).
4. Press the down arrow key until the image is properly aligned.

Note: *There are separate Vert. Pos values for Normal and Fit-to-View Modes. Adjustments in one mode are not made in the other.*

If this adjustment does not correct the problem, try a different Source Mode setting. Make sure the selection has the correct resolution and the closest V-sync and H-sync values.

Faint, Vertical Lines of Distortion

1. Use the Cyclops remote control to adjust the sync first. If the lines of distortion move uniformly across the screen as you adjust the sync, there is a Dot Clock problem.
2. Adjust the Dot Clock SLOWLY so that the shading gets further and further apart, until it is gone. Considerable trial and error may be required to avoid skipping over the correct value.

Dark, Vertical Lines of Distortion

Dark, uniformly spaced vertical lines (sometimes with smaller lines on either side of each dark line) may be seen in Fit-to-View mode or Normal Mode, or both. Any of the following steps may eliminate this problem.

Downloaded from Projector.com

Dark Lines in Fit-to-View Mode Only

1. With the menus closed, use the arrow keys on the control panel to pan the image down until it stabilizes.
2. Adjust the contrast.
3. Change the colors to 226k.
4. Change the computer screen's background colors. Certain colors may cause this pattern to appear in Fit-to-View Mode.

Dark Lines in Normal Mode Only

1. Adjust the contrast.
2. Change the colors (Preferences menu; Colors) to 226k.
3. Change the computer screen's background colors; certain colors may cause this pattern to appear in Fit-to-View mode.

Noise, Flickering Pixels, or Distortion

1. Use the Cyclops remote control to adjust the sync first. Make sure you use the entire range of sync adjustments before you proceed to Step 2. Many severe-looking distortions can be corrected using sync.

Note: *There are separate sync values for Normal and Fit-to-View modes. Sync adjustments made in one are not applied to the other. Make adjustments in both.*

2. If sync does not correct the problem, adjust the Dot Clock. Make changes to this parameter slowly to avoid skipping over the desired value. Considerable trial and error may be required.
3. If the problem still exists, adjust the VCO Gain.

UNKNOWN/UNRECOGNIZED VIDEO SOURCE

Occasionally, an unknown or unrecognizable video signal is encountered while using the DP9100. If you encounter an unknown or unrecognizable video signal, use the following steps to connect and adjust the projector:

1. Connect the projector to the video source and make sure that the power is on.
2. Select **User A** or **B** for a custom setting (Advanced menu).
3. If it is not already selected, select **Computer** input on the Source menu.

Downloaded from Projector.com

4 Check the Input Measurements window and record the V Sync, H Sync, and Lines values for the incoming video signal. Consult your computer's documentation for the Video Data Rate (dot clock) specifications.

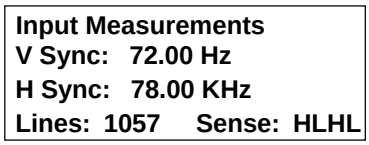

Figure 6-5, Input measurement window

Note: *The Lines value will be larger than the vertical lines of data displayed. This is due to additional vertical lines that are sent by the video system for video processing timing purposes.*

5 In the Source Mode menu, select the source mode closest to the values recorded in the step above.

6 Make adjustments as necessary to fine-tune your display.

7 Close the menus to save these settings.

COMPATIBILITY LIST

The following pages list the workstation/computer video signal characteristics stored in the DP9100's memory.

This list is subject to change as more platforms are supported. If your system is not listed, call Proxima for more information.

Downloaded from Projector.com

Label	Manufacturer	Model/Video Sys	Resolution	Dot Clk (MHz)	H Sync (KHz)	V Sync (Hz)
EWS1	SGI	Indy, Indigo2, XL, XZ, Extreme	1280 x 1024	140	81.97	76
EWS2	Intergraph	TD-2, TD-4, TD-5, G90	1280 x 1024	130	81.25	76
EWS3	Generic		1280 x 1024	135	80	76
EWS4	Sun	SPARC 2, GX, Turbo GX	1280 x 1024	135	80	76
VESA	Generic		1280 x 1024	134.3	78.43	74
EWS5	HP	735/125, 735	1280 x 1024	135	78	72
VESA	Generic		1280 x 1024	128	77	72
EWS6	DEC	3000/300	1280 x 1024	132.6	76.8	72
EWS7	SGI	Indy, Indigo2, XL, XZ, Extreme	1280 x 1024	130	76.9	72
EWS8	Sun	SPARC2 GX+	1280 x 1024	117	72	67
EWS9	DEC	3000	1280 x 1024	119.8	70.3	66
EWS10	Tadpole	SPARCbook 3	1280 x 1024	111.77	64.5	60
VESA	Generic		1280 x 1024	114.6	64	60
EWS11	IBM	RS6000	1280 x 1024	111.5	63.36	60
EWS12	SGI	Indy, Indigo2, XL, XZ, Extreme	1280 x 1024	107.35	63.9	60
EWS13	Intergraph	TD-2, TD-4, TD-5, G91	1280 x 1024	106	63.8	64
MAC	Apple	Power PC	1280 x 1024	135	80	75
MAC	Apple		1280 x 960	63	75	75
EWS14	Tadpole	SPARCbook	1152 x 900	105.5	71.8	76
EWS15	Tadpole	SPARC 2	1152 x 900	105.5	71.8	76
EWS16	Sun	SPARC 2	1152 x 900	100	71.7	76
VESA	Generic		1152 x 900	106	70	74
MAC	Apple	Quadra 605, PowerMac	1152 x 870	100	69	75
VESA	Generic		1152 x 900	103.8	68	72
EWS17	Sun	SPARC 2 GX, GX+	1152 x 900	94.5	62	67
EWS18	Tadpole	SPARCbook 3	1152 x 900	93	62	66
EWS19	NeXT	NeXT station	1152 x 870	98.8	60.6	68
VESA	Generic		1152 x 864	109.4	76	80
VESA	Generic		1152 x 900	85	55.5	60
EWS25	Sun	SPARC 2 Turbo GX	1152 x 900	94.5	61.7	66
VESA	Generic		1152 x 900	98.8	66	70
EWS20	Intergraph	TD-2, TD-4, TD-5, G90, G91	1024 x 768	104	81.25	99.328
VESA	Generic		1024 x 768	80	63	75

*Denotes interlaced models

Downloaded from Elcodis.com

Label	Manufacturer	Model/Video Sys	Resolution	Dot Clk (MHz)	H Sync (KHz)	V Sync (Hz)
VESA	Generic		1024 x 768	84.5	62.5	78
EWS21	Tadpole	SPARCbook 3	1024 x 768	81.3	61.2	76
*MAC	Apple	PowerPC	1024 x 768	80	60	75
XGA	Apple	Quadra 605 (19"), PowerMac	1024 x 768	74.7	56.4	70
XGA	Generic		1024 x 768	80	53.3	67
VESA	Generic		1024 x 768	64.3	48.88	60
VESA	Generic		1024 x 768	77.3	58.1	72
VESA	Generic		1024 x 768	65	48.5	60
EWS22	SGI	Indy, Indigo2, XL, XZ, Extreme	1024 x 768	64.3	48.88	60
EWS23	HP	735/125, 735	1024 x 768	65	48.5	60
EWS24	RDI	RDI Lite	1024 x 768	50	46.5	60
VESA	Tadpole	SPARCbook 2, SPARCbook 3	1024 x 768	65	47.5	60
VESA	Generic	*	1024 x 768	50	37.8	46
Laptop	Toshiba	T4500C*	1024 x 768	45	35.4	43
8514A	IBM	8514A*	1024 x 768	43.6	34.5	43.5
Laptop	Toshiba	2150 CDT	1024 x 768	44	35.4	43
MAC	Apple		1024 x 768	80	60	75
SVGA	Apple	MAC	800 x 600	51	48.14	72
VESA	Generic		800 x 600	40	37.9	60
Laptop	Tadpole	SPARCbook 3GX	800 x 600	36.3	36	57.5
VESA	Generic		800 x 600	36	35.16	56
SVGA	Apple	MAC	800 x 600	36	35.24	56
Laptop	Toshiba	T4500	800 x 600	36.7	35	56.4
VGA	Generic		640 x 480	25	31.5	60
VGA	Generic		640 x 480	31.5	38	72
VGA	Generic	Text Mode	720 x 480	25	31.5	70
VGA	Toshiba	2150 CDT	640 x 480	25	31.9	60
VGA	Generic		640 x 480	32	38	75
VGA	Toshiba	2150 CDT	800 x 600	40	39	62.5
MAC	Apple		832 x 624	57.3	49.73	74.5
MAC	Apple	LC	640 x 480	31.4	35	67
MAC	Apple	13"	640 x 480	30.3	35	66
VGA	Apple	MAC	640 x 480	30	34.7	66
VGA	Generic		640 x 480	25	31.5	60
VGA	Tadpole	SPARCbook 2, SPARCbook 3	640 x 480	25	30.65	59.3

Downloaded from Projector.com

WHERE TO GET HELP

If you still need help after checking the Troubleshooting Chart and making adjustments, or you need replacement parts, call your dealer's technical support line. If your dealer cannot solve your problem, please call Proxima Customer Service at:

U.S.A. and Canada
(619) 457-5500
Press 1 for Customer Service
Fax: (619) 457-8542

Europe:
+31-43-358 5200
+31-43-358 5201 (Fax)

Outside U.S.A. and Canada
(619) 457-5500
Press 1 for Customer Service
Fax: (619) 622-0173
Fax: (619) 457-8542

World Wide Web
http://www.prxm.com
Click **Customer Service**.

RETURNS

If your projector is determined to be defective, you will be issued a Return Material Authorization Number. After you have received this number, send the projector, all cables, a copy of your sales receipt, and a description of the problem, freight prepaid, to Proxima. Clearly note the Return Material Authorization Number on the *outside* of the shipping box.

Note: *A carton without a Return Material Authorization Number on the outside will be returned unopened by Proxima.*

Send authorized returns to:

U.S.A. and Canada:
Proxima Corporation
RMA #_____
9440 Carroll Park Drive
San Diego, CA 92121-2298

Europe:
Proxima Corporation
RMA#_____
Horsterweg 24
6191 RX Beek
The Netherlands

Please ship the projector in its original container. If the original package is not available, contact Proxima for packaging.

Downloaded from Projector.com

Appendix A

DP9100 SPECIFICATIONS

Color	16.7 Million Colors
Display Technology	LCD: Active Matrix 1024 x 768
Resolution	Multiple Graphics Modes (640 x 480, 800 x 600, 1024 x 768, 1152 x 900, 1280 x 1024
Contrast Ratio	100:1 Typical
Video Compatibility	NTSC M 3.58 MHz; PAL B, G, H, I 4.42 MHz; SECAM 4.43 MHz; S-VIDEO
Projection Lamp	575 Watt Metal Halide
Brightness	300 ANSI Lumens (typical)
Keystone Correction	4.5 degrees
Audio System	Digital Stereo Sound, two built-in 3 Watt Speakers
Inputs	1 Computer Video 2 Composite Video (NTSC, PAL, SECAM) 2 S-Video 1 Computer Stereo Audio 2 Composite Video Stereo Audio 1 Microphone Cyclops Interactive Pointer System
Outputs	Stereo Audio (2 RCAs) 2 Monitor
Power Source	90-265 VAC, 50-60 Hertz
Dimensions	Closed -13.8" (H) x 19.8" (W) x 7.3" (D) (35 x 50.2 x 18.5 cm) Open - 13.8" (H) x 19.8" (W) x 25.1" (D) (35 x 50.2 x 63.75 cm)
Weight	31.6 lbs. (14.3 kg)
Projection Distance	4 ft. to 12 ft. (1.22 m to 3.7 m)
Compatibility	IBM PC, PS/2 and compatibles Apple: Macintosh II, LC, Quadra, Centris, Performa, and PowerBook. Apple Macintosh Classic, Classic II, compact Macintosh family. Workstations: Sun, Hewlett-Packard, IBM RS/6000, Silicon Graphics, DEC Alpha, Intergraph,NeXT.

Downloaded from Projector.com

Appendix B

Accessories and Replacement Parts

REPLACEMENT PARTS

PART	PART NUMBER
Replacement lamp	L71
Cyclops remote control	A95
Power Cord, IEC, North America	C1002-10
Power Cord, IEC, Europe	C1001-10
Power Cord, IEC, Italy	C1003-10
Power Cord, IEC, UK	C1004-10
VGA to LCD cable	C800-6
Mac to LCD adapter	C804-0
Mac to LCD cable	C802-6
Mac ADB cable	C470-6
13C3 to LCD cable	C801-6
SGI to LCD adapter	C947-12
SGI 13C3 to LCD cable	C943-6
DEC 3C3 to LCD adapter	C947-10
DEC 3C3 to LCD cable	C948-6
S-Video cable	C466-6
Computer Audio cable	C498-6
Serial cable	C936-6
Composite audio/video cable	C497-6
Mini-jack to RCA cable adapter	C5105
Cyclops F/X diskettes (Windows/Macintosh)	A50F/X

Downloaded from Projector.com

ACCESSORIES

PART	PART NUMBER
MediaExpress Image Display System	ME90H
Cyclops Interactive Pointer System	A2079
Cyclops Laser Pointer	A90
Powered Loudspeaker System	A55
Desktop Projector Rolling Hard Case	A297
BNC Cable Kit	A37

Downloaded from Projector.com

Appendix C

Sense Lines

This appendix explains how to adjust the projector if you're having trouble connecting to a computer with no external monitor.

WHAT ARE SENSE LINES?

Certain display cards and video systems rely on sense line information from the monitor to correctly configure themselves for display resolution. The absence of sense line information causes some display cards to output a default video signal, and actually prevents some video cards from outputting video at all.

Sense line information is only required when you are using a system without a monitor and the video card defaults to an incompatible resolution. Sense line information can be found in the technical documentation that came with your computer.

CONFIGURING THE DESKTOP PROJECTOR 9100

1. Determine the default resolution for your video system.
2. Gather sense line information from your computer documentation or from your video card documentation. Typical sense line settings are listed later in this appendix.
3. Connect and turn on the projector.
4. Choose the **Advanced** menu.
5. Set Sense 3, Sense 2, Sense 1 and Sense 0 to the settings recommended for your system.
6. Exit the menus and restart your computer (do not turn off the projector).

Downloaded from Projector.com

MACINTOSH DISPLAYS

The next table shows typical sense line settings for Macintosh systems, based on the system's resolution. Try these settings only if you have trouble projecting an image without an external monitor connected to the computer.

Remember to restart your computer after you make these changes.

DISPLAY RESOLUTION	SENSE LINE SETTING(S)
640 x 480	Sense 3: High Sense 2: High Sense 1: High Sense 0: Low
1152 x 870	Sense 3: High Sense 2: Low Sense 1: Low Sense 0: Low
832 x 624 and 1024 x 768	Your system needs a Macintosh terminator. Try the Macintosh Sync Adapter (02-20-UNV) available from Griffen Communications Corp., 1451 Elm Hill Pike, Park Elm Bldg, Suite 100, Nashville TN 37210 (615) 399-0990 fax: (615) 399-7060.

IDENTIFYING SENSE LINE SETTINGS

To determine the current sense line setting:

1. Connect the projector to the computer and the monitor.
2. Make sure all hardware is turned on and that the correct resolution is displayed on the monitor and through the projector.
3. Open the projector's menus and choose **Input Source**, **Input Measurements**. The four sense line settings will appear in the window.

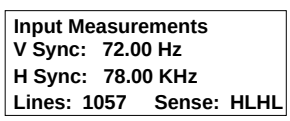

Figure C-1, Input Measurements windows

Downloaded from Projector.com

Sense line settings for popular video cards:

SYSTEM	GRAPHIC CARD OR MONITOR TYPE	RESOLUTION	SENSE 3	SENSE 2	SENSE 1	SENSE 0
Hewlett-Packard	OmniBook	640 x 480	High	High	High	Low
MAC / PowerBook[1]	RGB 13"	640 x 480	High	High	High	Low
	16" (with terminator2)	832 x 624	High	High	High	High
	RGB 19" (with terminator2)	1024 x 768	High	High	High	High
	RGB 21"	1152 x 870	High	Low	Low	Low
Sun SPARCstation	GX	1152 x 900 66 Hz	High	Low	High	High
		1152 x 900 76 Hz	High	High	Low	Low
		1280 x 1024 76 Hz	High	Low	High	Low
	GXplus	1152 x 900 66 Hz	High	High	High	High
		1152 x 900 76 Hz	High	High	High	Low
		1280 x 1024 67 Hz	High	High	Low	Low
	TurboGX/TurboGXplus	1024 x 768 60 Hz	High	High	Low	High
		1152 x 900 66 Hz	High	High	High	High
		1152 x 900 76 Hz	High	High	High	Low
		1280 x 1024 67 Hz	High	Low	High	Low
		1280 x 1024 76 Hz	High	Low	High	High
	ZX	1024 x 768 76 Hz	High	Low	Low	Low
		1152 x 900 66 Hz	High	Low	High	High
		1152 x 900 76 Hz	High	High	High	Low
		1280 x 1024 76 Hz	High	Low	High	Low
Sun SPARC	Voyager	1024 x 768 76 Hz	High	Low	Low	Low
		1152 x 900 76 Hz	High	High	High	Low
Silicon Graphics[3]	Multiscan (Indigo[2] with XL graphics and Indy)	1280 x 1024 76 Hz	Low	Low	Low	High
	Multiscan	1280 x 1024 76 Hz	High	Low	Low	High
	Single Scan	1280 x 1024 76 Hz	High	Low	High	Low
	Single Scan	1024 x 768 76 Hz	High	High	High	Low
RDI	PowerLite	1152 x 900 76 Hz	Low	High	Low	Low

[1] Per Apple, the PowerBook will only display resolutions up to 832 x 624.

[2] The Griffin Mac Sync Adapter can select many different resolutions through switch settings on the adapter itself. Instructions to use these switches are included with the adapter. To contact Griffin regarding the adapter (part number 02-20-UNV): Griffin Communications Corporation, 1451 Elm Hill Pike, Suite 100, Nashville, TN 37210, phone (615) 399-0990, fax (615) 399-7060.

[3] Using sense lines with Silicon Graphics workstations requires the use of the Proxima C943-6 SGI 13C3 to 13C3 cable. This cable is available in the Proxima SGI Cable Accessory Kit (part no. A36).

Downloaded from ProjectorCentral.com

Index

A

Adapters 1-8
Adjusting the volume
  Volume keys 2-7
Advanced features 2-12
Advanced menu 3-10
  Hor. Pos 3-10
  Sense 3, 2, 1, 0 3-10
  User 3-10
  VCO gain 3-10
  Vert. Pos 3-10
air flow 1-21
arm release lever 1-2
Arrow keys i-11, 2-3
AUDIO 1/2 In 1-7
audio adjustments 2-7
  balance 2-8
  bass control 2-7
  displaying the volume slider 2-7
  fade 2-8
  treble control 2-7
Audio menu 3-7
  Audio Mode 3-7
  Balance 3-7
  Bass 3-7
  Fade 3-7
  Mic. Volume 3-7
  Mute 3-7
  Treble 3-7
  Volume 3-7
AUDIO OUT 1-7

B

balance 2-8
bass and treble controls 2-7
BNC Block to LCD Connector Cable 1-15
BNC Connections 1-15
BNC to LCD Connector Cable 1-16
Break timer 2-11
brightness setting 2-5

C

Cables
  Included 1-8
  Optional 1-8
Cleaning/changing air filters 5-5
  right filters 5-7
  top filter 5-5
Clear key i-11, 2-3
Closing the projector 1-4
Compatibility List 6-9
composite audio/video cable 1-18
COMPUTER AUDIO IN 1-7
COMPUTER IN 1-8
COMPUTER OUT 1-8
Connecting a microphone 1-18
Connecting a monitor 1-8
Connecting an external stereo system 1-20
Connecting external speakers 1-19
Connecting video and audio 1-17
  computers 1-18
  S-Video sources 1-18
  VCRs 1-17
Connecting without a monitor 1-11
Connecting your computer
  13C3 connections 1-13
  BNC 1-15
  DEC 3C3 1-15
  Macintosh 1-10
  Notebook computers 1-12
  PCs 1-10
connector panel 1-7
  AUDIO 1/2 In 1-7
  AUDIO OUT 1-7
  COMPUTER AUDIO IN 1-7
  COMPUTER IN 1-8
  COMPUTER OUT 1-8
  CYCLOPS port 1-7
  MIC 1-8
  S-Video-1/2 1-7
  VGA OUT 1-8
  Video 1/2 1-7
contrast setting 2-6
control panel i-10

Downloaded from projector.com

Correcting shimmering or streaks 2-6
Adjusting the Sync 2-6
Correcting vertical banding 2-6
Adjusting the Dot Clock 2-6
Adjusting the Red, Green, and Blue settings 2-6
Adjusting the Tint 2-6
Cyclops F/X i-11, 2-2, 4-1
Cyclops interactive pointer system i-2
connecting 1-16
Cyclops menu 3-3
Button 3-3
Calibrate 3-3
CYCLOPS port 1-7
Cyclops remote control i-10, 2-1, 2-2
batteries 5-10
Fit-To-View/MediaExpress key i-11, 2-3
Lamp key i-10, 2-3
Menu key i-11, 2-3
MouseDisk i-10, 2-2
Mute key i-11, 2-2
Prog 1, 2 key i-10, 2-2
programming 2-12
Reverse/Forward/Pause key i-11, 2-2
Setup key i-11, 2-2
Source key i-10, 2-2
Volume keys i-11

D

DEC 3C3 to LCD adapter 1-15
DEC 3C3 Video Connections 1-15
DEC 3C3-LCD connector cable 1-15
Desktop Projector 9100
description i-1
diagonal image size 1-24
distance from screen 1-24
Dot Clock adjustment 6-4
DP9100
maintenance 5-1
power consumption 1-6
precautions 1-21
Draw toolbar 2-9

F

fade 2-8
fade and balance 2-8
filters 5-5
Fit-To-View feature 2-11
Fit-To-View key i-11, 2-3
flip mirror i-6
cleaning 5-1
release lever 1-3
focus 1-23
Forward key i-11, 2-2
Freeze 4-8
FROM COMPUTER 1-9

H

H-Sync values 6-3
half-normal height 6-6
Hor. Pos
adjusting 6-4
Horizontal Double Image 6-5

I

image adjustments 1-23, 2-5
brightness 2-5
contrast 2-6
correcting keystoning 1-24
focusing the image 1-23
image size 1-24
raising or lowering the image 1-23
Image menu 3-5, 3-6
Blue 3-5
Bright 3-5, 3-6
Contrast 3-5, 3-6
DotClk 3-5
Factory Default 3-5
Green 3-5
Interlace 3-5
Red 3-5
Saturation 3-6
Sync 3-5
Tint 3-6
image position 2-6
image size 1-24
Input Measurements window 6-3
Input Source menu 3-4
Input Measurements 3-4
Source Mode 3-4
Source Select 3-4
input sources
definition 2-4
Source key 2-4
switching 2-4
Introduction A-1

Downloaded from Projector.com

K

keystoning 1-24

L

lamp
  replacing 5-3
    installing the new lamp 5-4
    lamp type A-1
    removing the old lamp 5-3
Lamp indicator 2-4
Lamp key i-10, 1-22, 2-3
LightBoard tool 2-2, 2-8
  Draw toolbar 2-9
lighting the lamp i-9

M

Mac to LCD Adapter 1-11
MAC to LCD connector cable 1-11
Macintosh connections 1-10
Main menu 3-1
  Advanced 3-1
  Audio 3-1
  Cyclops 3-1
  Image 3-1
  Input Source 3-1
  Preferences 3-1
  Projector 3-1
  Tools 3-1
maintenance 5-1
  cleaning the air filters 5-5
  cleaning the lens and mirror 5-1
  cleaning the projection window 5-1
  replacing the lamp 5-3
MediaExpress Image Display System i-2
  connecting 1-16
  PDF files i-2
MediaExpress key i-11, 2-3
Menu key i-11, 2-3
menus
  Advanced 3-10
  Audio 3-7
  changing the language 2-5
  Cyclops 3-3
  Image 3-5, 3-6
  Input Source 3-4
  Main 3-1
  Preferences 3-9
  Projector 3-8
  reverting to factory defaults 2-5
  saving your settings 2-5
  Tools 3-2
  using 2-4
MIC 1-8
monitor connection 1-8
MouseDisk i-10, 2-2
Moving the projector 1-4
  while open 1-5
Mute i-11
Mute key 2-2, 2-7

N

Notebook connections 1-12
  setting the projector as an external monitor 1-12

O

Opening the projector 1-1
Overtemp indicator i-11, 1-22, 2-4

P

Parts
  Replacement B-1
Pause key i-11, 2-2
PC connections 1-10
PDF file 1-16
Positioning the projector 1-1
power switch 1-6
Powered Loudspeaker System 1-19
Preferences menu 3-9
  Colors 3-9
  Language 3-9
  On-screen 3-9
  Prog 2 3-9
Prog 1, 2 keys i-10, i-11, 2-2
Projecting transparencies 2-11
projecting with a separate monitor 1-9
projection lens
  cleaning 5-1
Projector menu 3-8
  Lamp Hours 3-8
  Projection 3-8
Proxima cables
  included 1-8
  optional 1-8

Downloaded from Projector.com

Q

Quick Start i-4
  connecting video and audio i-9
  connecting your computer i-8
  setting up the projector i-5
  turning on the projector i-9

R

rear projection 2-7
recessed carrying handle 1-4
remote mouse tracking 2-8
Replace Lamp indicator i-11
Replacement Parts B-1
Return Material Authorization Number 6-12
Reverse key i-11, 2-2
reverse video 3-9

S

S-Video-1/2 1-7
See-it/Show it i-11, 2-2, 4-6
sense lines 1-9
  definition C-1
  Macintosh displays C-2
Setting up the projector i-5
Setup key i-11, 2-2
SGI 13C3 to LCD connector cable 1-14
SGI connections 1-14
  without an external monitor 1-14
SGI to LCD adapter 1-14
Source key i-10, 2-2
source mode
  selecting 6-3
Specifications A-1
Sync adjustment 6-4
Sync setting 2-6

T

Technical Support 6-12
temperature extremes 5-10
13C3 connections
  SGI 1-14
  standard 1-13
13C3 to LCD Connector Cable 1-13
Tools menu 3-2
  Break Timer 3-2
  Break Timer Value 3-2
  LightBoard 3-2
  LightBoard Mode 3-2
  Mouse Tracking 3-2
Troubleshooting 6-1
  chart 6-1
Turning on the projector 1-21
Turning the lamp off 1-22

U

user profiles 2-12

V

V-Sync values 6-3
VCO Gain
  adjusting 6-5
Vert. Pos
  adjusting 6-5
Vertical Double Image 6-7
VGA OUT 1-8
VGA to LCD connector cable 1-10
VGA/MAC adapter 1-10
VIDEO 1/2 1-7
volume 2-7
  Mute key 2-7
Volume keys i-11, 2-2

W

What's in the box i-3
World Wide Web address 6-12
workstations 1-13

Downloaded from Projector.com

PLEASE READ

This manual is provided as a free service by Projector.com.

We are in no way responsible for the contents of the manual. We do not guarantee its accuracy and we do not make any claim of copyright. The copyright remains the property of their respective owners.

ABOUT PROJECTOR.COM

Projector.com (http://www.projector.com) is your review and buying guide resource for DLP and LCD video projectors.

Visit the site to read the latest projector news and reviews, read and comment on projector specifications, download user manuals and much more.